MPRI-JAAER | INTERNATIONAL JOURNAL OF APPLIED & ADVANCED ENGINEERING RES.
VOL. 02 NO. 1 OCT-2023 ISSN: 1116 - 2716

SIMULATION OF SHUNT ACTIVE POWER FILTER BASED FUZZY LOGIC CONTROLLER FOR MINIMIZATION OF TOTAL HARMONIC DISTORTION

HAMISU USMAN; & NURADDEEN MAGAJI

Department of Electrical Engineering, Bayero University Kano, Nigeria

Abstract

In the past, most of electrical power system equipment and electronics was designed to produce nearly sinusoidal voltage and current wave forms. But nowadays, with the present trend, interest and wide spreads of power electronics equipment for both industrials, commercials and residential consumers, electronics devices are no longer operate with an ideal current and voltage waveform, because of the harmonics in nature. With this, traditional passive filters were first introduced to mitigate harmonics currents produced by non-linear loads. But passive filters are limited in service due to its limitations such as heavy in sizes, bulky and tendency for parallel and series resonances with supply impedance. Because of the drawback of passive filters, active power filters are now introduced which saved as the dynamic and viable solution to mitigate current harmonics drawn by [redacted] non-linear loads. In this paper, the modeling and simulation of shunt active power filter to

Keywords:
Current harmonic mitigation, Fuzzy Logic Controller, IEEE 519-2014 and Nonlinear Load.

EDITOR-IN-CHIEF
Prof. Saeid Eslamian [IRAN]

mitigate the harmonics currents drawn by non-linear loads are proposed. Fuzzy Logic Controller (FLC) was used to control the active power filter, because of its simplicity, required no any mathematical modeling of the system and its robust. Simulations were performed via MATLAB/SIMULINK and SIMPOWER tool box environment. The total harmonics distortions (THD %) of the simulation results obtained to be within the recommended IEEE 519-2014 harmonic standard limits. The proposed controller has shown a good and dynamic response in mitigating current harmonic drawn by nonlinear load.

Introduction

Previously, most of electrical equipment was operated on purely sinusoidal current and voltage wave forms. But nowadays, with the proliferation of modern power electronics devices like adjustable speed drives, uninterrupted power supply, switch mode power supplies, fluorescent lamps, Television set, fax machines, photocopy machines, personal computers printers and many more non-linear devices used in industrial, commercial and consumers applications, in this regard, supply current and voltage are no longer sinusoidal. Because they are non-linear in nature, the non-linear of the devices seriously draw and inject harmonics current to the supply system which normally affects the system performance and efficiencies of the equipment. These harmonics injection leads to power quality degradation of the supply system which causes adverse effects such as overheating in cables, power losses, interference to nearby communication facilities, electromagnetic induction (EMI) and total failure of equipment etc. Harmonic produced by non-linear loads in power system draw current in abruptly pulses than in a smooth manner for the past decades and up till now, power quality issues have been a worried to utilities, consumers researchers and power quality system engineers.

EDITOR-IN-CHIEF
Prof. Saeid Eslamian [IRAN]

With this, efforts have been made in order to remedy these harmonics problems, so that the compensated results of the THD met and certified the IEEE 519-2014 standard norms on the minimum THD of current and voltage within the supply system. Various solutions to overcomes these harmonics problems are, traditional passive filters, active filters, magnetic wave shaping and network reconfiguration to mentioned a few (Fuchs, 2008), (Emadi, Nasiri & Bekiarov, 2004), (Ranjbar, Masoum & Jalilian, 2009). The most popular devices among the harmonic cancellations techniques are passive and active filters. Traditionally; passive filters had been firstly introduced for the harmonic current compensation, but due to its drawbacks, such as series and parallel resonances, tuning, large in size, heavy in weight and cancellation of some selective harmonics due to the non-linear loads, that is why it operation becomes very limited nowadays. With the introduction and advancement of superior filters to the passive filters in our today's markets, active power filters are now the dynamic and viable solution for simultaneously compensating harmonics current and reactive power drawn by non-linear loads. In addition, shunt active power filters have the advantages of power factor correction, cancellation of harmonics induced in the neutral conductor of three-phase four-wire system, and balancing of voltage levels in three-phase three-wire system. In this paper, the modeling and simulation of single phase shunt active power filter is designed and simulated by MATLAB environment. The simulation results are presented with and without filter. All the simulation results are confirmed to be within the imposed IEEE 519-2014 harmonic distortion limits.

POWER QUALITY

Power quality is any problem on power system which leads to current, voltage or frequency deviations that resulted in the failure or malfunction

INTERNATIONAL JOURNAL – AAER
VOL. 02 NO. 1 OCT-2023 ISSN: 1116 - 2716

of consumer's equipment or devices within the consumer's jurisdiction. The quality of power is very important to both the utility and the consumer, because most of the supply current and voltage were supplied to the consumer's by the utility in purely sinusoidal wave forms. The deterioration of the power system quality originated from the consumer's side, due to the used of non-linear loads such as adjustable speed drives, uninterrupted power supplies, rectifiers etc, that draws harmonics on the equipment and the devices. Moreover, power quality problems can be found in many ways within the utility or consumer's sides, such as voltage sags, voltage flicker, noise, frequency variations, notches DC offset and harmonics. Each of this type of power quality problem can be mitigated with different harmonic suppression techniques, depending on the type of the problem encounter by the utility or consumers. Harmonic power quality problems due to non-linear loads are the main study throughout in this paper, due to its severity amongst the mentioned power quality problems. Different power quality problem issues in power system network that caused serious devastating effect in the performances of power supply were studied previously by many researchers. Figure 1. Shows the representation of sag wave form for the supply system, sag is the sudden drop in the peak value of the wave forms in either voltage or current. Voltage sag can be suppressed by dynamic voltage restorer (DVR) custom devices. Voltage sag can resulted in voltage drop and even cause failure to equipment or devices under operation in the consumer's network.

HARMONICS

Any currents or voltages wave forms that are integer multiples of the system fundamental frequency (50HZ or 60HZ) are called harmonics. With the system fundamental frequency of 50HZ which is the first fundamental harmonic. This fundamental harmonic, cannot be change even with FFT

EDITOR-IN-CHIEF
Prof. Saeid Eslamian [IRAN]

INTERNATIONAL JOURNAL – AAER
VOL. 02 NO. 1 OCT-2023 ISSN: 1116 - 2716

analysis because 50HZ when multiplied by1, it will still be 50HZ, that is why for any FFT analysis the first harmonic which is the fundamental frequency does not change and remained constant. In this regard the 2nd, 3rd, 4th, 5th, 6th, 7th harmonics and so on will be 100HZ, 150HZ, 200HZ, 250HZ, 300HZ and 350HZ respectively. Figure 1 below shows the fundamental frequency with 5th and 7th harmonics frequencies together with the summations of the two harmonics frequencies.

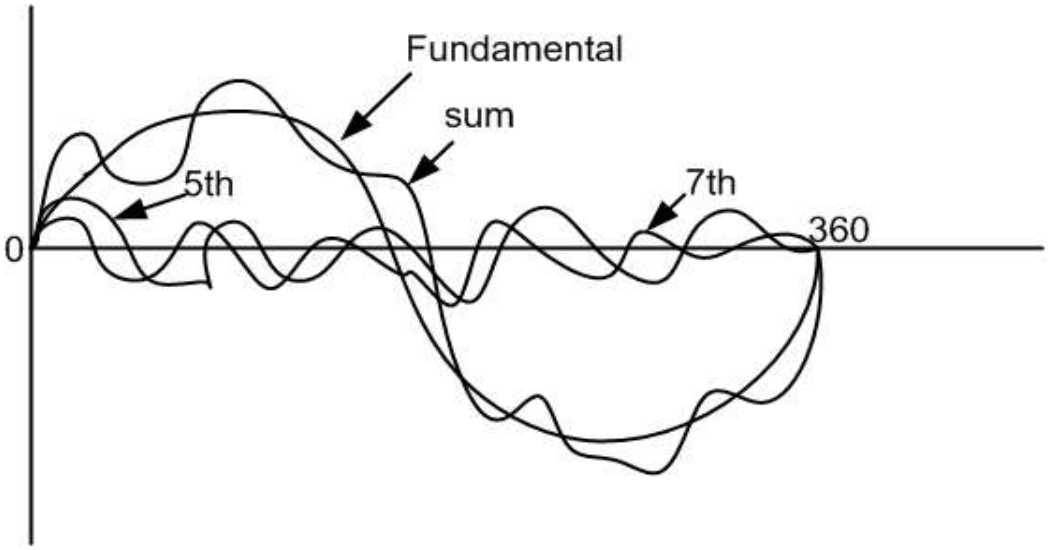

Figure 1. Fundamental and sum of 5th and 7th order harmonics (Tucson, 1999)

PROPOSED CONTROL ALGORITHM

The control algorithm is the brain of the active filter to operate; in this paper, fuzzy logic controller was designed using MATLAB toolbox to control the shunt active power filter. This controller was used because of its simplicity in implementation, does not need accurate mathematical model, can work with an in precise input, and also it can accept non-linearity of a system, it is also robust and better than traditional controllers, such as proportional integral (PI) and proportional integral derivative (PID) controllers. In the paper, a synchronous reference frame was used for the extraction of harmonic current due to the non-linear load of the system.

EDITOR-IN-CHIEF
Prof. Saeid Eslamian [IRAN]

INTERNATIONAL JOURNAL – AAER
VOL. 02 NO. 1 OCT-2023 ISSN: 1116 - 2716

FUZZY LOGIC CONTROLLER

In 1965 the idea of Fuzzy logic controller was brought by Zadeh Lotfi a Californian University Professor, he firstly proposed a technique of how to process an imprecise data with a complex input, and he also described how to mimic human control logic (Funchs E. F. H 2008). The importance of Zadeh's idea was first realized after the introduction and wide spreads of modern computers and controllers applications ((Funchs E. F. H 2008). The use of fuzzy logic controller gained interest by researchers in the application of shunt active power filter control algorithm, because of its simplicity in design procedure, acceptance of inputs with an imprecise behavior, and does not require an accurate mathematical modeling of the input or output of a system. However, fuzzy logic controller can work with linguistic language like 'if then'. Fuzzy logic implies uncertainty and imprecise knowledge of the system, but fuzzy logic controller processes the uncertainty and takes decision of the system to be analyzed (Benalla and Djeghloud 2005). In this paper, Mandani approach fuzzy logic was considered in the design of the rule base and membership functions of the controller. The linguistic variables used in this fuzzy logic controller are: Small Positive (SP), Medium Positive (MP), Large Positive (LP), Small Negative (SN), Large Negative (LN) and Zero (ZE). Table 1 shows the linguistic variables with two inputs, error (e) and its derivative (Δe).

Table1. Inputs linguistic Rules Variables of the fuzzy logic controller

de e	**LN**	**SN**	**ZE**	**SP**	**MP**
LN	LN	LN	LN	MN	SN
SN	LN	MN	SN	ZE	SP
ZE		SN	ZE	SP	MP

EDITOR-IN-CHIEF
Prof. Saeid Eslamian [IRAN]

INTERNATIONAL JOURNAL – AAER
VOL. 02 NO. 1 OCT-2023 ISSN: 1116 - 2716

SP	MN	ZE	SP	MP	LP
LP	LN	SN	ZE	SP	MP

STRUCTURE OF FUZZY LOGIC CONTROLLER

Fig. 3.2 described the general structure for the proposed fuzzy logic controller, as it can be considered that; fuzzy logic controller is basically segmented into four blocks namely: fuzzification process, knowledge base, inference mechanism and defuzzification process.

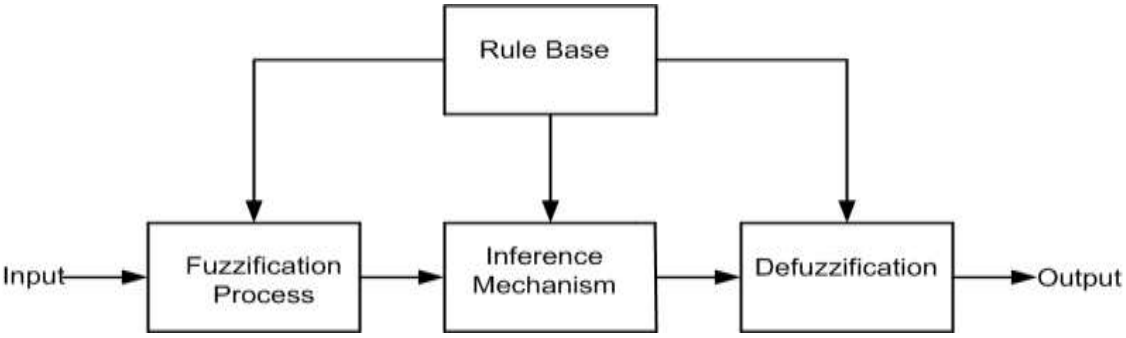

Figure 2. Structure of fuzzy logic controller

- Fuzzification process: Is the first block in the FLC, aimed at changing the inputs data error (e) and its derivative (Δe) in to fuzzified values that can be recognized by membership sets of the fuzzy logic controller.
- Knowledge Base: This process comprises of data and rule base of the system. The data base includes the input and output membership's functions that supply an appropriate message to the fuzzification and defuzzification respectively. But rule base which involved linguistic rules based for the desired fuzzified input members to the appropriate control process.
- Inference Mechanism process of the fuzzy logic controller accepts the linguistic rules which change the input system in to a desire fuzzified output level.

EDITOR-IN-CHIEF
Prof. Saeid Eslamian [IRAN]

INTERNATIONAL JOURNAL – AAER
VOL. 02 NO. 1 OCT-2023 ISSN: 1116 - 2716

- Defuzzification process that is responsible for the conversion of the fuzzified output data by the output membership's functions to the process system which is to be controlled (Krishna and Eedara 2012). The fuzzy logic controller is characterized as follows:
- A simple mandani approach was used in the simulation process of the fuzzy logic controller.
- The method of centre of area (COA) or simply called centre of gravity (COG) was also employed in the defuzzification process.
- Two inputs error (e) and change of error (Δe) with single output was used in the design of the fuzzy logic controller.
- A triangular member ship function was selected, because of its popularity and simple in implementation.

FUZZY LOGIC MEMBERSHIP FUNCTIONS

Membership function of a fuzzy logic is a graphical representation of the degree of input variables which are plotted for its membership values in the ranges between 0 and 1. The range of the possible input variables is called universe of discourse (Fuzzy Logic Implementation). Membership functions of a fuzzy logic are normally found in various types and of different shapes, depending on the applications at which the designer intend to achieve. Among the types of these memberships are, triangular memberships, trapezoidal membership, sigmoid membership, Gaussian membership, Z-shape membership and Bell-shape membership function to mentioned a few. Among them triangular membership is the simplest and the most commonly used type of memberships function in the design of mandani fuzzy logic controller. However, the triangular membership function can be found with equal or unequal sizes shapes, depending on the application at which the designer intends to use. In this paper, triangular membership function was selected and used because of its simplicity in implementation. Figure 3(a), Figure 3(b) and Figure 3 (c) shows the two inputs error (e) and change of error (Δe) and output resultant of the two inputs respectively.

EDITOR-IN-CHIEF
Prof. Saeid Eslamian [IRAN]

INTERNATIONAL JOURNAL – AAER
VOL. 02 NO. 1 OCT-2023 ISSN: 1116 - 2716

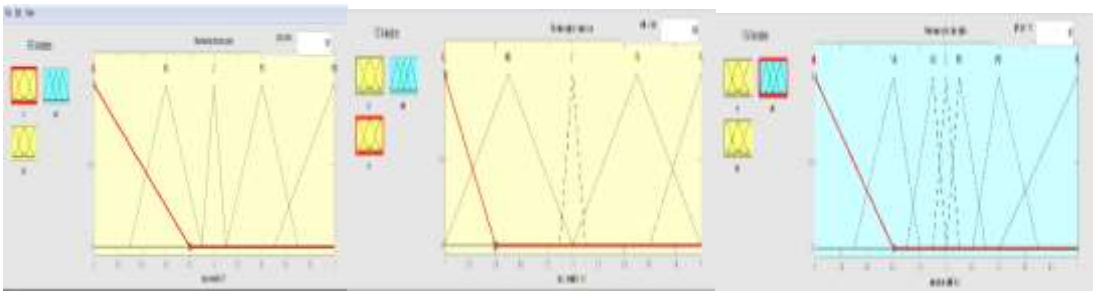

Fig 3(a) Input variable error 'e' Fig 3(b) Input variable 'Δe' Fig 3 (c) Output variables 'out'

COMPLETE MODEL OF THE PROPOSED SINGLE-PHASE SHUNT ACTIVE POWER FILTER VIA MATLAB/SIMULINK ENVIRONMENT

The complete modeling of the proposed single-phase shunt active power filter is depicted in Figure 4, which comprises of the single phase power supply, non linear load, the voltage source inverter and the all necessary measuring instruments such of scopes and the controller system. Figure 5, is the modeling of the full bridge rectifier with non-linear parallel RC load been supplied from the main source of AC power supply. However, Figure 6. Shows the switching signals generated by Fuzzy logic controller, which is the sub system of the Fuzzy logic controller from the complete model of the proposed simulation.

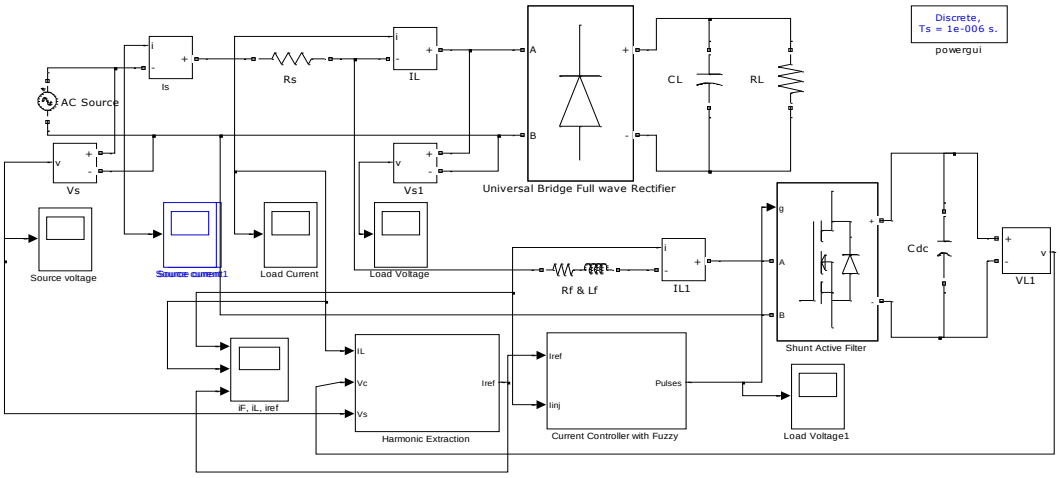

Figure 4. Complete MATLAB/Simulink block of single-phase Shunt Active Power Filter

EDITOR-IN-CHIEF
Prof. Saeid Eslamian [IRAN]

INTERNATIONAL JOURNAL – AAER
VOL. 02 NO. 1 OCT-2023 ISSN: 1116 - 2716

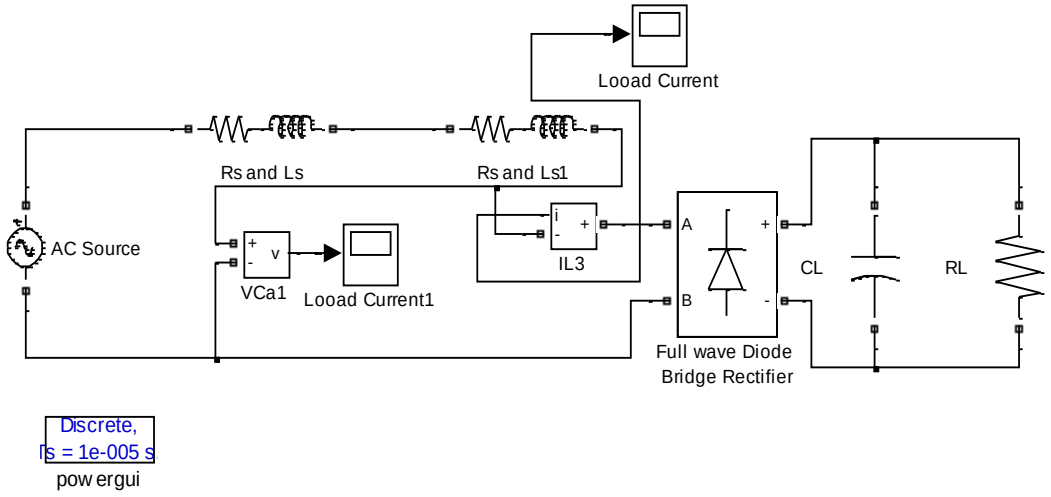

Figure 5. Full bridge diode non-linear load rectifier with an RC parallel Loads

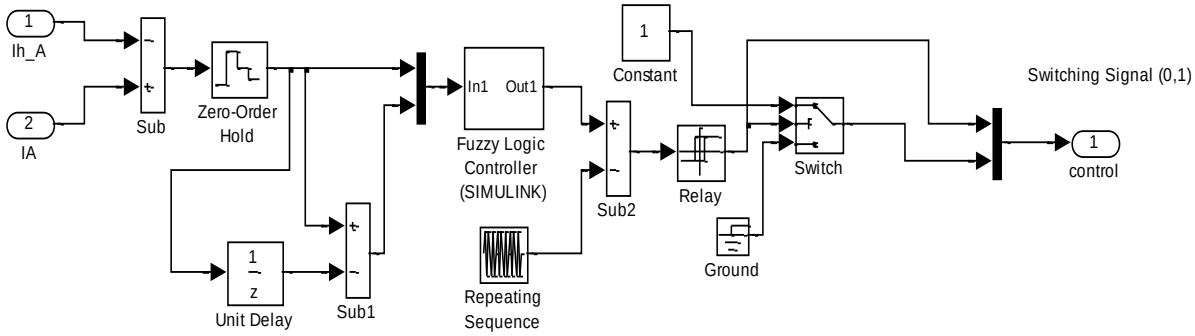

Figure 6. Switching signal generated by fuzzy logic controller

SIMULATION RESULTS AND DISCUSSION

Having seen the various modeling of the shunt active power filter, the simulation results for the corresponding modeling are presented in Figure 7 which depicts the load voltage without shunt active power filter due to the full bridge diode rectifier with a parallel LC loads connected at the output of the rectifier, while Figure 8 shows the load current before compensation with shunt active power filter, which is the main source harmonic generation in the supply system. However, Figure 9 and Figure 10 depict the

EDITOR-IN-CHIEF
Prof. Saeid Eslamian [IRAN]

INTERNATIONAL JOURNAL – AAER
VOL. 02 NO. 1 OCT-2023 ISSN: 1116 - 2716

source current and source voltage after applying shunt active power filters respectively. The source current is now in phase with the source voltage.

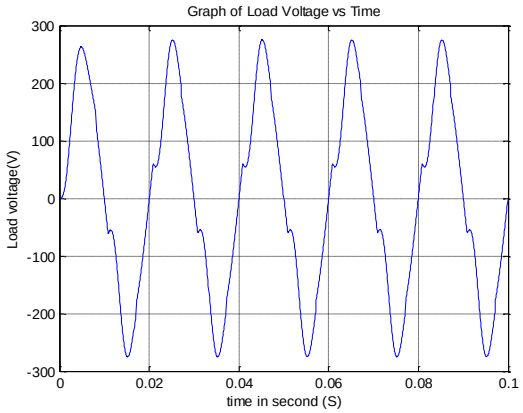

.

Figure 7. Load Voltage without Filter

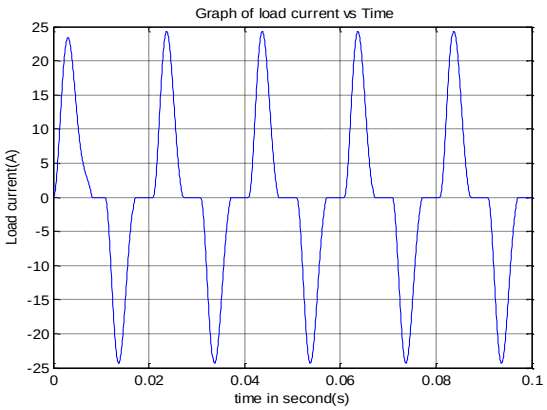

Figure 8. Load current without Filter

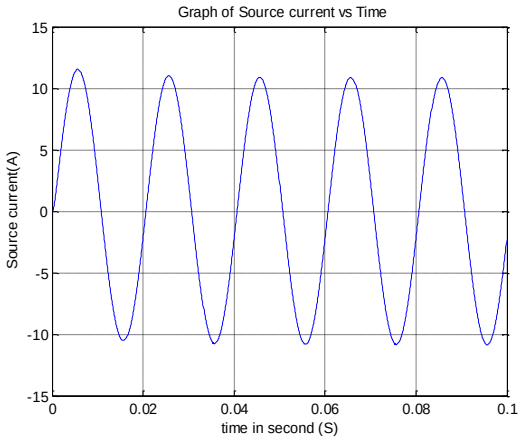

Figure 9. Source current With Filter

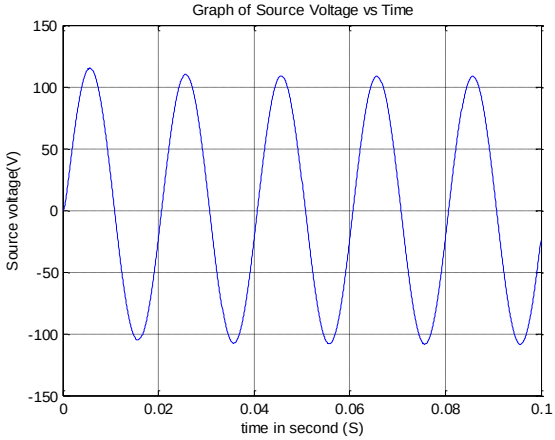

Figure 10. Source voltages with Filter

FAST FOURIER TRANSFORM (FFT) TOTAL HARMONIC DISTORTION (THD) RESULTS

From the simulation results, the respective THD of the source voltage, load current are obtained using the FFT analysis with and without compensation using the proposed shunt active power filter. Figure 11 shows 17.16% as the total harmonic distortion of the load voltage before the use of the shunt filter. Figure 12 similarly, shows the FFT analysis of the source voltage with

EDITOR-IN-CHIEF
Prof. Saeid Eslamian [IRAN]

total harmonic distortion of 0% which it supposed to be no harmonic on it due to the fundamental frequency. In the same vein, Figure 13 shows the THD of 48.18% of the load current due to the rectifier circuit. Figure 14 depicts the source current with THD of 4.91% after applying shunt active power filter. This mean that 4.91% is within the stipulated IEEE – 519 -2014 harmonic standard limit.

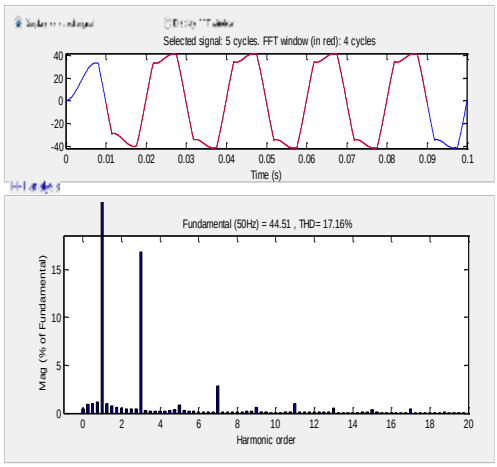

Figure 11. Load Voltage before Compensation with SAPF

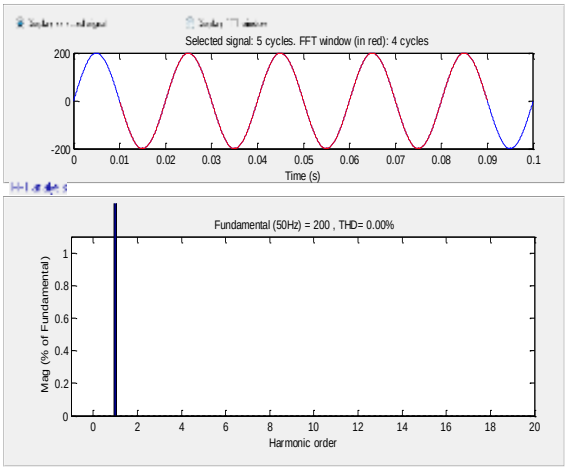

Figure 12. Source Voltage after compensation with

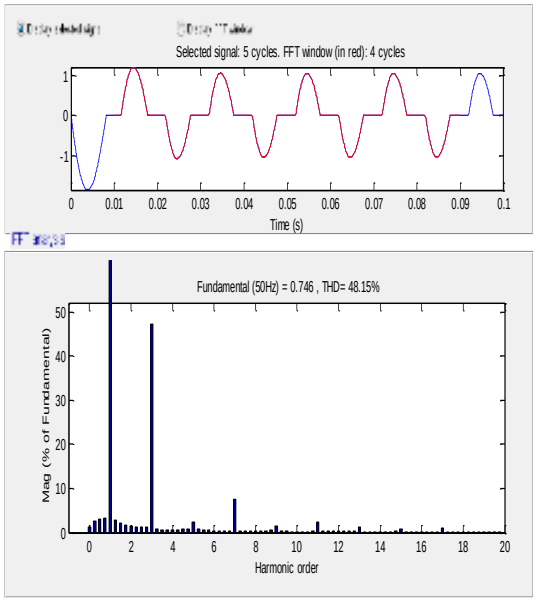

Figure 13. Load Current without Filter

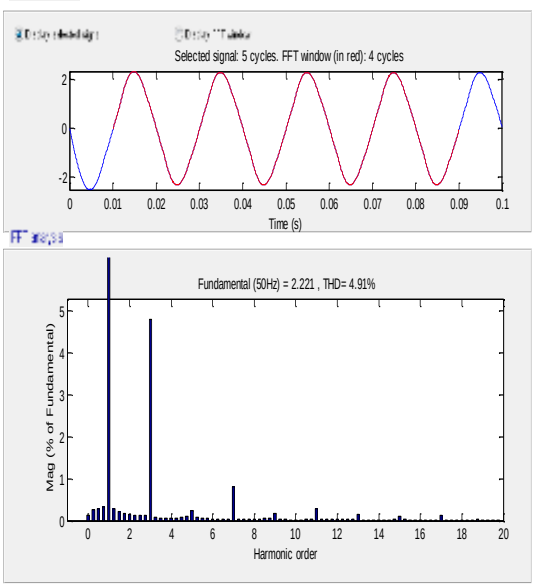

Figure 14. Source current with Filter

CONCLUSION

This paper, has presented the modeling and simulation of single phase shunt active power filter using the famous MATLAB environment approach. Details simulation model of the complete proposed model is also shown in Figure 4 with the proposed application of Fuzzy logic controller in order to compensate the current harmonic drawn by nonlinear load. The total harmonic distortion of 4.91% was found using the Fast Fourier Transform (FFT) analysis. The simulation results found to be within the stipulated IEEE-519-2014 harmonic norm. The proposed Fuzzy logic controller has shown a dynamic response in mitigating current harmonic drawn by nonlinear load.

REFERENCES

Benalla, H. and Djeghloud, H. (2005). *Shunt Active Filter Controlled by Fuzzy Logic*. King Saud University. Vol. 18. No. 2, Pp. 231-247.

Emadi, A., Nasiri, A., and Bekiarov, S. B. (2004). *Uninterruptible Power Supplies and Active Filters*. CRC Press 2004.

Funchs E. F. H. (2008). Power Quality of Electric Machines and Power Systems. Proceeding of the Eight IASTED International Conference, 2008.

Fuzzy Logic controllers-Portland and state Maseeh College of Engineering. https//www.ee.pdx.edu/-mperkows/CLASS_RoBOTICS/FEBR-19/fuzzy.pdf .

Fuzzy Logic Implementation-Membership Function Explained. www.brighthubengineering.com/diy-electronics-devices/48950-t-42k

Krishna, K. T. and Eedara A. K. (2012). *Hybrid Series Active Filter by Using PI and Fuzzy Controller.* International Journal of Engineering and Science Research. Vol. 2, Issue 11, November 2012, Pp. 1696-1705.

Ranjbar M., Masoum M. and Jalilian A. (2009). *Comparison of Compensation Strategies for Shunt Active Power Filter Control in an balanced Three-phase four-wire Systems*. Canadian Conference on Electrical and Computer Engineering. CCECE 2009. Pp. 1061-1066.

INTERNATIONAL JOURNAL – AAER
VOL. 02 NO. 1 OCT-2023 ISSN: 1116 - 2716

Tucson (1999). Practical Overview of Mine Power system Harmonics,Western Mining Electrical Association. Arizona Nov. 1999.

EDITOR-IN-CHIEF
Prof. Saeid Eslamian [IRAN]