E-ISSN: 1116 – 2716 P-ISSN: 3026-8214
MPRI-JAAE | INTERNATIONAL JOURNAL OF APPLIED & ADVANCED ENGINEERING RES.
VOL. 05 NO. 5 - JULY, 2024

DEVELOPMENT, SIMULATION, CALIBRATION, AND IMPLEMENTATION OF A WIRELESS SOLAR IRRADIANCE GAUGE

D. W. MEDUGU AND C. P. SARMEJE
Department of Physics, Adamawa State University, Mubi – Nigeria.
Corresponding Author: *dalemedugu23@gmail.com*

tetfund
TERTIARY EDUCATION TRUST FUND

Abstract

In developing countries, lack of functional equipment for solar irradiation research and training is a problem. This research presents a solution by the development, simulation, calibration, and real-world implementation of a novel Wireless Solar Tracking Irradiance Gauge (WSTIG) for measuring direct Irradiance: sunlight that travels straight from the sun to the earth. The WSTIG system is designed, assembled and programmed using readily available components including an Arduino Nano microcontroller for control and data processing, an ESP8266 wireless radio module for communication, and a photovoltaic (PV) cell as the primary irradiance sensor with the two servo motors for precise positioning of the PV cell to maximize direct irradiance capture. Simulation studies are conducted to validate the design. Calibration procedures are then employed to ensure the accuracy and reliability of irradiance measurements obtained from the PV cell sensor, also. The integration of a Thing Speak channel facilitates remote monitoring and data visualization. From simulation results the sensor showed a reasonably linear response at higher light levels (80% and above). However, at lower light levels (60% and below), the response is more significantly non-linear, indicating that the sensor's accuracy or sensitivity diminishes with decreasing light. This could be due to several factors, such as sensor limitations, shading effects, or electronic noise, also The logic for motor control based on LDR readings appears sound and ensures that the system adjusts to maximize light

Key word: Solar Energy, Irradiance Measurement, Wireless Sensor Network, Calibration, Simulation, Implementation.

EDITOR-IN-CHIEF
Prof. Saeid Eslamian [IRAN]

exposure by moving in the direction where more light is detected ensuring they remain aligned with the sun throughout the day to maximize energy capture. The prototype appears to overestimate irradiance at lower levels, which gradually aligns with the MP-100 as irradiance increases which is of course due to the prototype tracking the sun and measuring direct irradiance at all times. Since the amount of solar irradiance affects how much energy a solar panel can convert into electricity, the WSTIG then becomes important for monitoring photovoltaic panels installations. e

Introduction

The increasing global demand for renewable energy sources, coupled with advancements in sensor technologies and wireless communication, has spurred innovations in solar energy monitoring systems. Solar irradiance, the power per unit area received from the Sun in the form of electromagnetic radiation, is a critical parameter for assessing the performance and efficiency of solar photovoltaic (PV) systems. Monitoring solar irradiance facilitates better understanding of system behavior, aids in optimizing energy output, and ensures efficient utilization of solar resources (Boyle, 2012). Measurement of solar irradiance also helps in the optimal positioning and monitoring of solar panels.

Traditional solar irradiance measurement systems often rely on wired connections, limiting their deployment flexibility and scalability. To address these limitations, wireless technologies offer a promising solution by enabling remote monitoring and data acquisition. In this research, we propose the development, simulation, calibration, and implementation of a Wireless Solar tracking Irradiance Gauge (WSTIG) utilizing Arduino Nano as a microcontroller, ESP8266 as a wireless radio module, a PV cell as the irradiance sensor, servo motors as trackers and ThingSpeak as the cloud-based monitoring platform. Additionally, the WSTIG incorporates two servo motors for precise positioning of the PV cell, ensuring optimal orientation towards the incident solar radiation (Mohamad et al, 2021).

The Arduino Nano serves as the central processing unit, responsible for data acquisition from the PV cell, wireless transmission via the ESP8266 module, and control of the servo motors. The ESP8266 facilitates wireless communication, enabling real-time data transmission to the ThingSpeak channel for remote monitoring and analysis. Utilizing a PV cell as the irradiance sensor ensures accurate measurement of solar irradiance, as PV cells inherently respond to incident light intensity. Moreover, the integration of servo motors enables automatic adjustment of the PV cell orientation, ensuring maximum exposure to direct solar radiation throughout the day (Izzah et al., 2024).

Through simulation and calibration procedures, the WSTIG is optimized for accurate and reliable direct solar irradiance measurement across various environmental conditions. The

EDITOR-IN-CHIEF
Prof. Saeid Eslamian [IRAN]

implementation of a cloud-based monitoring platform enhances accessibility and scalability, allowing users to remotely monitor multiple WSTIG units in real-time. This research contributes to the advancement of wireless solar monitoring systems, offering a cost-effective, scalable, and efficient solution for solar irradiance measurement and optimization in diverse applications, including solar energy harvesting, agriculture, and environmental monitoring (ThingSpeak, 2024).

SYSTEM DESCRIPTION AND DESIGN IMPLEMENTATION:

The system is developed from the block diagram in figure 1.

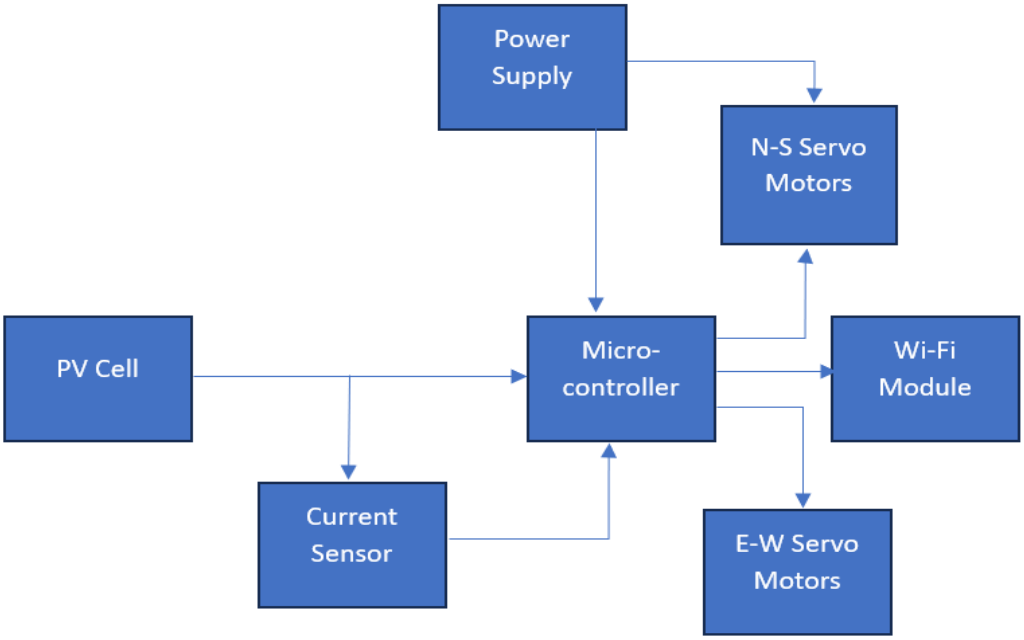

Figure 1. Block diagram of the conceived System

Sensor Theory/Selection

Irradiance is the measure of the power density of sunlight or the total power from a radiant source falling on a unit area. The solar constant for Earth is the irradiance received by Earth from the sun through the atmosphere (Karim et al., 2011).

$S = E/(4\pi R2) = 1370\ W/m2$ (1)

Where: E=is the Sun total power = 3.9x1026W, R= is the average earth/sun distance = 1.5 x1011m.

Whilst, the irradiation is the measure of energy density of sunlight and is measured in kWh/m2. Irradiation is the integral of irradiance since energy is integrated over time.

The total irradiance of typical solar spectrum on the earth surface on a clear day is 1 kW/m2 (Zaharim et al., 2009). However, the availability of the irradiance usually considerably less than 1 kW/m2 due to the rotation of the earth and due to the weather condition. On a

EDITOR-IN-CHIEF
Prof. Saeid Eslamian [IRAN]

sunny day, the irradiance is higher than the rainy day. The condition for higher irradiance is when the direct solar radiation is not blocked by clouds, which is the combination of the bright light and radiant heat The term 'sunshine duration' has been used to indicate the cumulative time during which an area receives direct irradiance from the Sun of at least 120 watts per square meter by World Meteorological Organization (Al Riza, et al., 2011).

The photovoltaic effect describes the generation of an electric current in a material upon exposure to light. When photons from sunlight strike the surface of a semiconductor material within the PV cell, they transfer their energy to electrons, causing them to move. This movement of electrons creates an electric current, which can be measured.

The behavior of a PV cell is commonly represented by its current-voltage (I-V) characteristic curve. This curve illustrates the relationship between the current produced by the cell and the voltage across it under various conditions, including different levels of solar irradiance.

Solar irradiance, often denoted as (E), represents the power per unit area received from the sun. It is typically measured in watts per square meter (W/m^2). The irradiance incident on the surface of the PV cell directly affects its electrical output.

The current generated by the PV cell, denoted as (I), is directly proportional to the incident solar irradiance (E). This relationship can be expressed by the equation:

$$I = A.\ E \qquad (2)$$

Where (A) represents the effective area of the PV cell exposed to sunlight. This equation assumes that the efficiency of the PV cell remains constant.

So, for a given solar cell with a fixed area, it can be assumed that the value of solar irradiation is proportional to the power of the cell

For this study a 2.0 W monocrystalline panel was chosen as a sensor due to its superior efficiency ratings falling within the range of 15% to 25%. These panels offer enhanced power output per unit area. The Solar PV Cell, functioning as a photoelectric device, generates a potential difference (voltage) across its surface when exposed to sunlight. It operates as a single-junction P-N Semiconductor device following the rules of the I-V curve.

In the realm of Solar PV Cells, there are four crucial terms: Open Circuit Voltage (Voc), Short-circuit Current (Isc), maximum operating voltage (Vmp), and maximum operating current (Imp). Succinctly put, the Short-circuit Current (Isc) value exhibits a direct correlation with the intensity of sunlight, as depicted in the figure.

The panel's parameters are as follows:

- Maximum Output Voltage = 5V
- Maximum Output Current = 0.45A

The sensor is used as shown in figure

EDITOR-IN-CHIEF
Prof. Saeid Eslamian [IRAN]

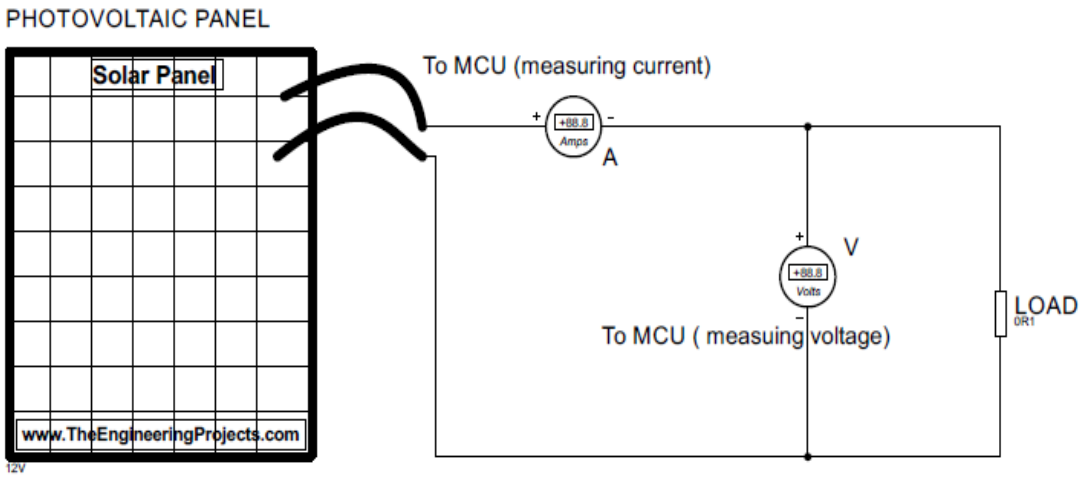

Figure 2. The basic method for solar radiation sensing

Wireless Communication

In order to wirelessly transmit irradiance data to the internet, one would need an ESP8266 WIFI module. The ESP8266EX from Espresso provides a highly integrated Wi-Fi SoC solution. With its comprehensive and self-contained Wi-Fi networking capabilities, the ESP8266EX can operate independently as a standalone application or as a subordinate to a host MCU. When serving as the application host, the ESP8266EX swiftly boots up from the flash. Its integrated high-speed cache aids in enhancing system performance and optimizing system memory.

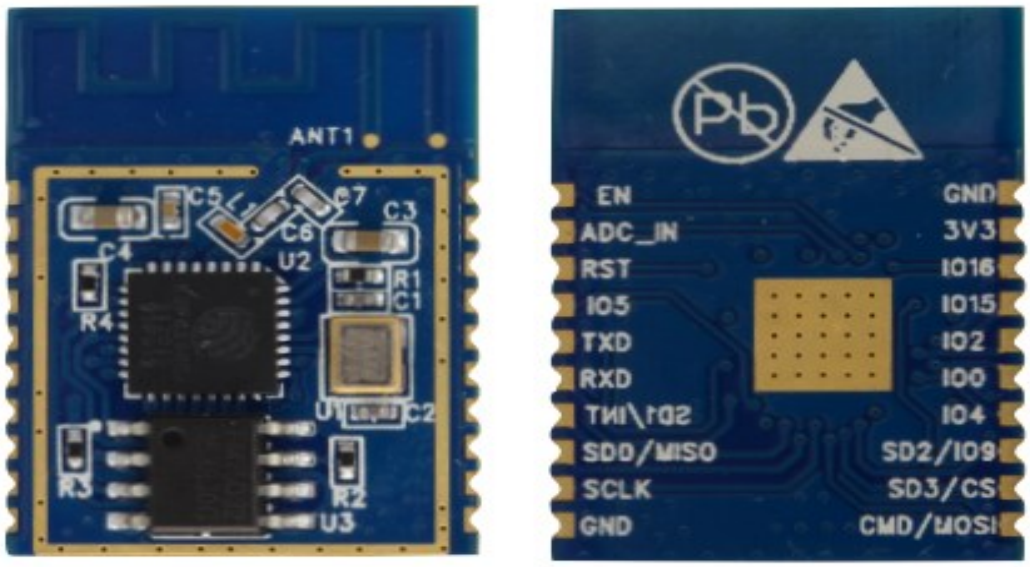

Figure 3. The Wi-Fi module. From ESPRESSIF, ww.espressif.com

EDITOR-IN-CHIEF
Prof. Saeid Eslamian [IRAN]

Complete Circuit Diagram

The designed circuit is given in figure 4.

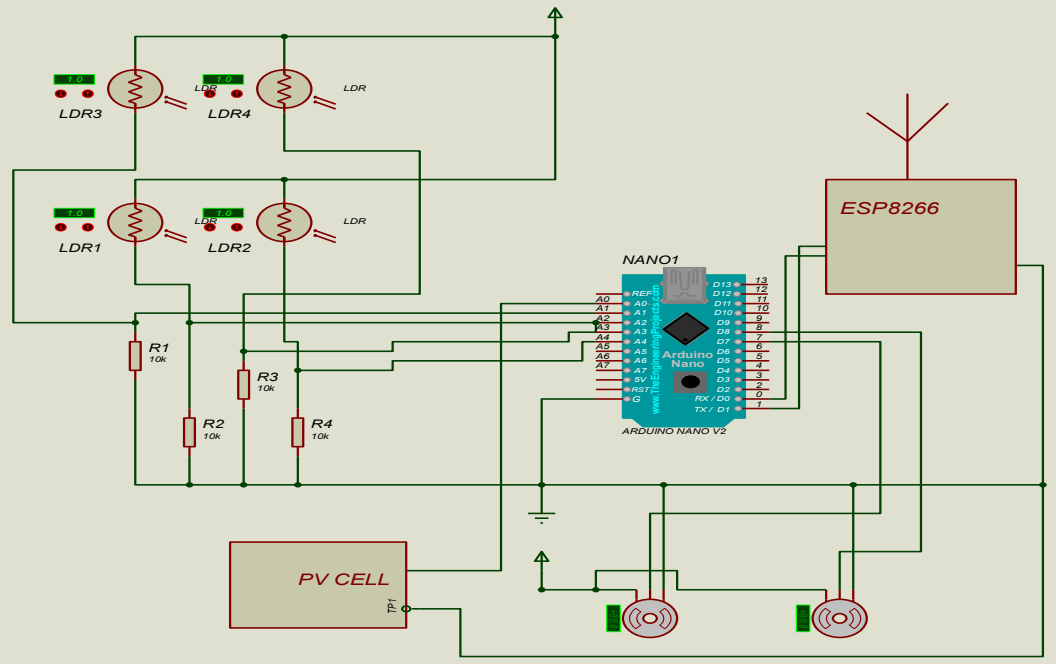

Figure 4. The designed circuit diagram within the timeline that I gave for the work.

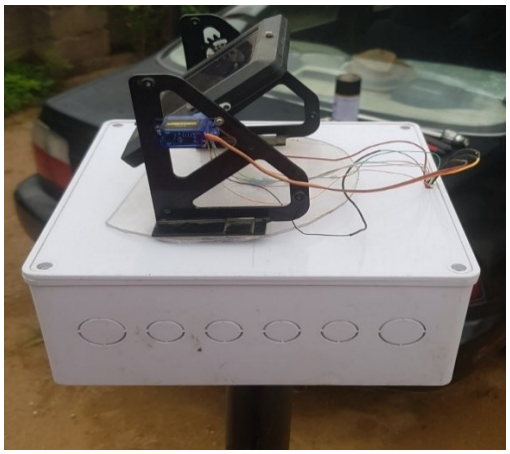

Figure 6. The realized system (3D View)



Figure 7. The realized system (Front view)

Simulation and Testing:

Proteus 8.0 on the Windows platform was utilized for designing the circuit diagram and simulating the entire system. Hex codes were transferred from the Arduino IDE to the controllers in Proteus, and configurations were adjusted in the VSPE software to ensure smooth simulation within Proteus. A key addition to the simulation was a virtual serial terminal, with two terminals incorporated: one for displaying sensor data readings and

the other for showcasing received data. Both datasets should align assuming the controllers are programmed correctly. The simulated diagram is depicted in Figure 8.

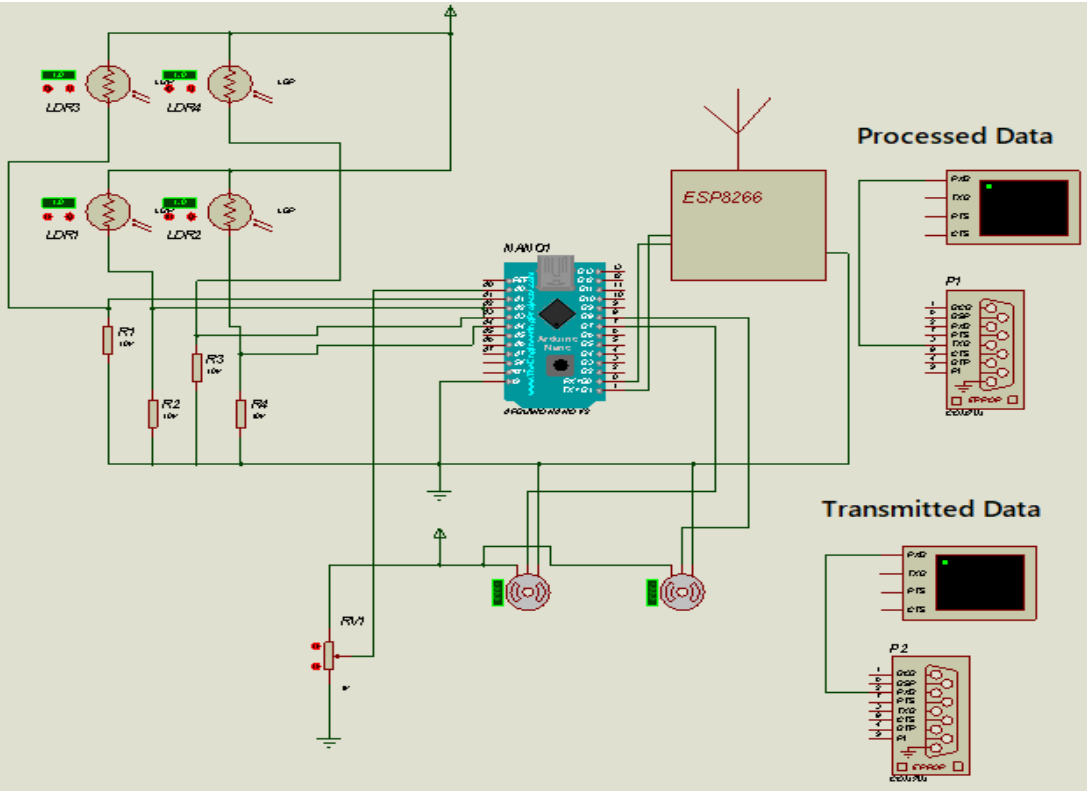

Figure 8. The simulated circuit

With simulation started and using the mouse, the settings are altered from default positions by:

1. Varying LDR1-LDR4
2. Varying RV1 representing the PV cell.

Simulation was done under six different settings of the solar intensity sensor.

A. Sensor at 100% setting
B. Sensor at 80% setting
C. Sensor at 60% setting
D. Sensor at 40% setting
E. Sensor at 20% setting
F. Sensor at 0% setting
G. Settings values of LDRs top > LDRs bot
H. Settings values of LDRs top < LDRs bot
I. Settings values of LDRs left > LDRs right

EDITOR-IN-CHIEF
Prof. Saeid Eslamian [IRAN]

J. Settings values of LDRs left < LDRs right

RESULTS AND DISCUSSION:

Simulation Result

Results obtained from simulation showed that varying the LDRs one after the other influenced the status of the servo motors, each LDRs serves to independently activate/deactivates the corresponding servo motor attached to its program sequence. Also varying the potentiometer RV1 results in corresponding value displayed on the virtual monitors representing the microcontroller processed and the wirelessly transmitted irradiance values which appeared same.

Table 1: Summary of simulation result

S/N	Condition	Result
1	A (sensor =100%)	1025W/m²
2	B (sensor = 80%)	925 W/m²
3	C (sensor = 60%)	165 W/m²
4	D (sensor = 40%)	71 W/m²
5	E (sensor = 20%)	32 W/m²
6	F (sensor = 0%)	0 W/m²
7	Settings values of LDRs top > LDRs bot	Motors moves south
8	Settings values of LDRs top < LDRs bot	Motor moves North
9	Settings values of LDRs left > LDRs right	Motor moves right
8	Settings values of LDRs left < LDRs right	Motor moves left

Calibration Process:

From field measurements taken by placing the experimental gauge alongside a standard pyranometer at the same time of the day for 18 days. Results obtained are given in Table 2.

Table 2: Comparison Result

Date 2:00PM	Result of Constructed irradiance meter	Result of Standard irradiance meter (MP-100)	Difference
	Irradiance in W/m²	**Irradiance in W/m²**	
01/01/24	1061	1060	+1
02/01/24	1122	1119	+3
03/01/24	1200	1198	+2
04/01/24	1061	1059	+2
05/01/24	1115	1103	+2
06/01/24	1200	1198	+2

EDITOR-IN-CHIEF
Prof. Saeid Eslamian [IRAN]

07/01/24	1300	1299	+1
08/01/24	1221	1220	+1
09/01/24	1410	1408	+2
10/01/24	1203	1200	+3
11/01/24	1140	1138	+2
12/01/24	1133	1135	-2
13/01/24	1008	1007	+1
14/01/24	1211	1208	+3
15/01/24	1046	1044	+2
16/01/24	1300	1301	-1
17/01/24	1210	1109	+1
18/01/24	1091	1089	+2
	1242	1239	+3
			30

From table 2 it was observed that there was difference between the two sets of results. The maximum variance is +4.0 W/m^2 while the minimum variance is -2.0 W/m^2. To correct the reading, average variance is determined and then added as factor in the microcontrollers program;

Average

$$= \frac{(V1 + V2 + \cdots \ldots . + V18)}{18}$$

$$= \frac{(1 + 3 + 2 + 2 + 2 + 2 + 1 + 1 + 2 + 3 + 2 - 2 + 1 + 3 + 2 - 1 + 1 + 2 + 3)}{18}$$

$$= \frac{(30)}{18}$$

$$= 1.67$$

The value 1.67 is added to irradiance calculating line 58 of the C++ program.

Performance Result

After calibration the gauge was installed alongside an MP-100 pyranometer and readings obtained were recorded as given in table 3.

Table 3: Performance results

Time	Result of Constructed irradiance meter	Result of Standard irradiance meter (MP-100)
	Irradiance in W/m^2	Irradiance in W/m^2
9:00	760	288
9:30	775	320
10:00	789	392
10:30	800	443

EDITOR-IN-CHIEF
Prof. Saeid Eslamian [IRAN]

11:00	834	538
11:00	865	590
12:00	945	599
12:30	980	975
13:00	1450	1450
13:30	1450	1445
14:00	1440	1400
14:30	1426	1280
15:00	1370	977
15:30	1300	852
16:00	1200	646
16:30	1100	592
17:00	976	615
17:30	634	338

Analysis

From simulation results on table 1 the sensor shows a reasonably linear response at higher light levels (80% and above). However, at lower light levels (60% and below), the response is more significantly non-linear, indicating that the sensor's accuracy or sensitivity diminishes with decreasing light. This could be due to several factors, such as sensor limitations, shading effects, or electronic noise. The second part of the results shows how the system's motors respond to different settings of the LDRs. This is crucial for ensuring that the solar panel or sensor array tracks the sun accurately. The logic for motor control based on LDR readings appears sound and ensures that the system adjusts to maximize light exposure by moving in the direction where more light is detected, this mechanism is fundamental for solar tracking systems, ensuring they remain aligned with the sun throughout the day to maximize energy capture.

Data on table 3 obtained from performance test includes irradiance readings (in W/m^2) at various times from both the constructed irradiance meter (prototype) and the MP-100 standard pyrometer, from which the following observations are made.

1. Initial Observations:

The constructed irradiance meter (prototype) shows a generally increasing trend in irradiance readings from 760 W/m^2 to 1450 W/m^2 and then a decrease back to 634 W/m^2.

The MP-100 standard pyrometer shows a similar trend but with generally lower readings ranging from 288 W/m^2 to 1450 W/m^2.

2. Reading Discrepancies:

At lower irradiance levels, the prototype consistently reads higher than the MP-100. For example, at 760 W/m^2 (prototype), the MP-100 reads 288 W/m^2, this is as a result of the prototype tracking the sun.

EDITOR-IN-CHIEF
Prof. Saeid Eslamian [IRAN]

As the irradiance level increases, the readings from both devices start to converge. At the peak reading of 1450 W/m², both devices report nearly identical values (1450 W/m² for the prototype and 1450/1445 W/m² for the MP-100) as a result of the single optimal position of the sun directly above the two sensors (standard and tracked prototype).

3. Linear Consistency and Calibration:

The difference in readings between the two devices suggests a potential calibration issue with the prototype. Lower readings show a higher discrepancy, which might indicate a non-linear response in the prototype compared to the standard pyrometer.

The prototype appears to overestimate irradiance at lower levels, which gradually aligns with the MP-100 as irradiance increases which is of course due to the prototype tracking the sun and measuring direct irradiance at all times.

4. Performance at Peak Levels:

At peak irradiance (1450 W/m²), the prototype and MP-100 readings are almost identical. This indicates that at high irradiance levels, the prototype can provide reliable readings comparable to the standard pyrometer.

Discussion

Overall, the simulation results demonstrate both the effectiveness and limitations of the prototype irradiance gauge. The sensor works well under optimal conditions but shows non-linear performance at lower light levels. The motor control logic based on LDR readings ensures proper alignment with the sun, which is critical for the efficiency of solar tracking systems. Further refinements in sensor sensitivity and calibration might be needed to enhance performance under varying light conditions.

The prototype may need recalibration to ensure more accurate readings across all irradiance levels. A non-linear calibration curve could be developed to correct the discrepancies observed at lower levels. The sensors used in the prototype might be more sensitive or have a different response characteristic compared to those in the MP-100. Understanding and adjusting for these characteristics will be crucial in improving accuracy.

Given the close alignment at higher irradiance levels, the prototype could be suitable for applications where irradiance is typically high. However, for applications requiring precision at lower irradiance levels, further adjustments are needed.

The prototype irradiance meter shows promise, particularly at higher irradiance levels where its readings closely match those of the MP-100 standard pyrometer. However, discrepancies at lower irradiance levels indicate a need for recalibration and potential adjustments in the sensor's response characteristics. Further testing and refinement will enhance its reliability and accuracy across the entire range of irradiance levels.

EDITOR-IN-CHIEF
Prof. Saeid Eslamian [IRAN]

CONCLUSION:

Through meticulous design and integration of various components, this research has successfully addressed the challenges associated with low cost and functional real-time solar irradiance measurement and tracking. By leveraging the capabilities of Arduino Nano and ESP8266, the system achieves wireless connectivity, enabling remote monitoring and control, thus enhancing its practicality and usability. Moreover, the calibration process ensures accurate irradiance measurement, essential for precise solar energy harvesting and system performance evaluation. The utilization of servo motors further enhances the system's functionality by enabling automated positioning of the PV cell for optimal exposure to sunlight, thereby maximizing capturing of direct irradiance. Overall, the successful implementation of this Wireless Solar Irradiance Gauge offers immense potential for applications in renewable energy systems, smart agriculture, and environmental monitoring. As solar energy continues to play a pivotal role in the transition towards sustainable energy sources, innovative solutions like this pave the way for enhanced efficiency, reliability, and scalability in solar energy utilization.

RECOMMENDATION

Based on the findings in this work additional tests are recommended to be conducted at different times and conditions to confirm the initial findings and to adjust the prototype for a wider range of conditions.

It is also recommended that further research and refinement of this system be undertaken as it holds promise for advancing the state-of-the-art in solar energy monitoring and management, contributing to a more sustainable and resilient future.

ACKNOWLEDGEMENT:

The author hereby acknowledges the sponsorship of this research by the Tertiary education trust fund (TETFUND)

REFERENCES:

Al Riza, D. F., Gilani, S. I., H. and Aris, M. S. (2011). Hourly Solar Radiation Estimation Using Ambient Temperature and Relative Humidity Data. International Journal of Environmental Science and Development.2(3).

Boyle, G. "Renewable Energy," Oxford University Press, 2012.

Izza A., Jamaaluddin, J., Fahruddin, A. Ahmad, F., Yadi, R., Dalmasius, G., Yusuf, S., Aep, S., Oo, A. & Kamaruzzaman, S. (2024). Monitoring solar heat intensity of dual axis solar tracker control system: New approach. Cases in thermal engineering. 53(2024)103791

Karim, S. A. A., Singh, B.S.M., Razali, R. and Yahya. N. (2010). Solar radiation data analysis by using Daubechies wavelets. Short Term Internal Research Funding (STIRF), No. 76/10.11.

Mohamad, A., Rahman, M., Phasinam, K., Mohamad, M., Saad, A., & S. Chionh, (2021). Analysis of an Arduino based solar tracking system. Journal of Physics. 2051 (2021) 012011

ThingSpeak Documentation, MathWorks, [Online]. Available: https://www.mathworks.com/help/thingspeak/. Accessed: Jan. 31, 2024.

Zaharim, A., Razali, A. M., Gim, T. P., and Sopian, K. (2009). Time Series Analysis of Solar Radiation Data in the Tropics,25 (4), 672-678.

EDITOR-IN-CHIEF
Prof. Saeid Eslamian [IRAN]