E-ISSN: 1116 – 2716 P-ISSN: 3026-8214
MPRI-JAAE | INTERNATIONAL JOURNAL OF APPLIED & ADVANCED ENGINEERING RES.
VOL. 05 NO. 5 - JULY, 2024

THE FORM AND TECHNIQUE OF 12V 75 Ah BATTERY CHARGER

[1]OYELEYE MATHEW OLAYINKA, [2]EBINOWEN TUSIN DAYO, AND [3]ADEDEJI JOSHUA IBUKUN

[1,3]School of Electrical Systems and Engineering, Federal University of Technology, Akure, Ondo State. Nigeria.
[2]School of Electrical and Electronic Engineering, Universiti Sains Malaysia, Engineering Campus. Malaysia.

Key word: Battery Charger, 12V 75 Ah Battery, Software Tools, Primary 0044ata

Abstract

A dependable battery charger for a 12V 75 Ah battery is constructed in this study. It employs a multi-stage charging profile and a straightforward H-bridge design with safe isolation for the most extended possible battery life. To make it affordable and dependable, parts and easily accessible control circuits (Arduino Nano) were employed. For the key parameters (current and voltage), an infrared thermometer and a multimeter were used to gather data. Proteus was used for the simulations. The charger's performance in a mobile office environment was assessed using an experimental/case study design. For assessment, a single movable office was chosen using a purposive sample approach. Using software tools and descriptive analysis, secondary parameters were calculated based on primary data. According to the report, 83.3% of charges are made efficiently. It is found that the study battery charger satisfies the required range of 70-85%.

Introduction

In today's world, where everything depends on electricity, individuals and businesses need a steady and dependable power source. Batteries come in two varieties: disposable Primary Batteries, which are meant to be used just once before being thrown away, and rechargeable Secondary Batteries, which can be used repeatedly after recharging. The current condition of innovative technology applications and experience worldwide is the result of extensive research and development in the field of battery technology. Researchers are exploring alternatives like lithium-sulfur for higher ability and solidstate batteries for improved safety and lifespan. (Dörfler et al., 2020). Whether brought on by infrastructural constraints, weather related occurrences, or unstable

EDITOR-IN-CHIEF
Prof. Saeid Eslamian [IRAN]

system dyna mics, power outages can seriously impair vital services and operations and cause distu rbances to everyday routines. These strategies, essential for perfecting battery perform ance and length of life, range from passive approaches like resistorbased balancing to more sophisticated active strategies like charge redistribution (Dörfler et al., 2020). In these situations, backup power systems—especially those that use inverter batteries— are essential for preserving a steady electricity supply (Jin et al., 2021). To keep vital systems running if the grid fails, these batteries are crucial in storing electrical energy for later use: battery charger, 12 volts, 7ah. An engineering process called battery charging involves feeding it the full wave rectified, filtered transformer output to properly charge a battery. A battery charger can increase the energy of a secondary cell by passing electricity across it (Cao et al., 2022). The primary purpose of a charge controller, which is necessary for a practical battery charger, is to keep the batteries safely and correctly throughout time while preventing deep discharge (Cao et al., 2022). A battery charger is a device that stores energy in batteries using an electric current (Collins, 2023). The size and kind of battery being charged find the steps involved in the charging process, such as the amount of voltage or current utilized, the duration, and what to do when it's done. Certain battery types, known as overcharging, can withstand repeated charging after completely charging. This basic charger needs to be physically unplugged after the charging cycle. Other battery kinds use a timer to find when charging is finished. Some battery types cannot tolerate overcharging, overheating, or even exploding. They will also suffer from reduced ability and lifespan. To compensate for cable impedance, chargers can increase the output voltage proportionately with the current; however, a well-thought-out battery charging system is essential to the reliable and safe operation of these batteries. Appropriate charging is needed to keep battery health, maximize operating lifespan, and ensure preparedness during power outages (Arshadi et al., 2021). To securely regulate the charging current and voltage, assess the charge level, and cut off after the charge, chargers may include temperature or voltage-sensing circuits and a microprocessor controller. The reliance on outside technicians to keep or replace 12V lead-acid battery chargers, which are necessary for off-grid and portable power systems, poses three challenges: higher expenses from outsourcing service, possible battery damage from improper or delayed charging procedures, and system downtime while waiting for technician availability (Lenka et al., 2022). The project will design and execute a dependable, user-serviceable 12V battery charger for a 75Ah lead-acid battery to address this problem. This will keep the most significant charging performance while minimizing the need for outside technicians, saving money, and lowering the likelihood of system outages and battery damage. Additionally, the charger will incorporate robust safety features, such as overcurrent and overcharging protection, into its design.

Additionally, advancements in cell balancing methods (which ensure that each cell in a battery pack runs at the same voltage level. This is essential for maximizing the overall capacity and lifespan of the battery. Various cell balancing methods have been proposed and studied to improve the performance of lithium-ion batteries. These methods range from passive techniques, such as resistor-based balancing, to more advanced active strategies, such as charge redistribution) which are crucial for maximizing the performance and lifespan of batteries (Dörfler et al., 2020). The current rating needs to

EDITOR-IN-CHIEF
Prof. Saeid Eslamian [IRAN]

be suitable for a fair amount of time to charge the battery, and it shouldn't go above 10–20% of its capacity (7.5A in this case). A multi-stage charging process maximizes both efficiency and safety. According to Jackey (2019), safety features that protect against short circuits, overcurrent, and overcharging are the project that will design and execute a dependable, user-serviceable 12V battery charger for a 75Ah lead-acid battery to address this problem. This will keep the most significant charging performance while minimizing the need for outside technicians, saving money, and lowering the likelihood of system outages and battery damage. Essential. Utilizability is further improved by a user-friendly design with transparent monitors or displays.

MATERIALS AND METHODS

An H-bridge topology was chosen due to its everyday use, cost-effectiveness, and alignment with the existing inverter. This charger utilizes a step-down transformer to decrease the voltage from the mains (230 V) to 15 V, regulating the output voltage to the battery. The design implements a multi-stage charging algorithm controlled by the Arduino and voltage divider circuit, which checks the battery voltage, perfecting efficiency during the charging process. Safety features such as overcharge and overcurrent protection are integrated using the voltage (from the voltage divider circuit) and current readings (from the current transformer), along with the Arduino Nano (MCU) and relay to disconnect the charger when necessary. Additionally, MCU and LCD were used to display an intuitive and informative interface that includes voltage, charging current, and charging status of the battery to the user.

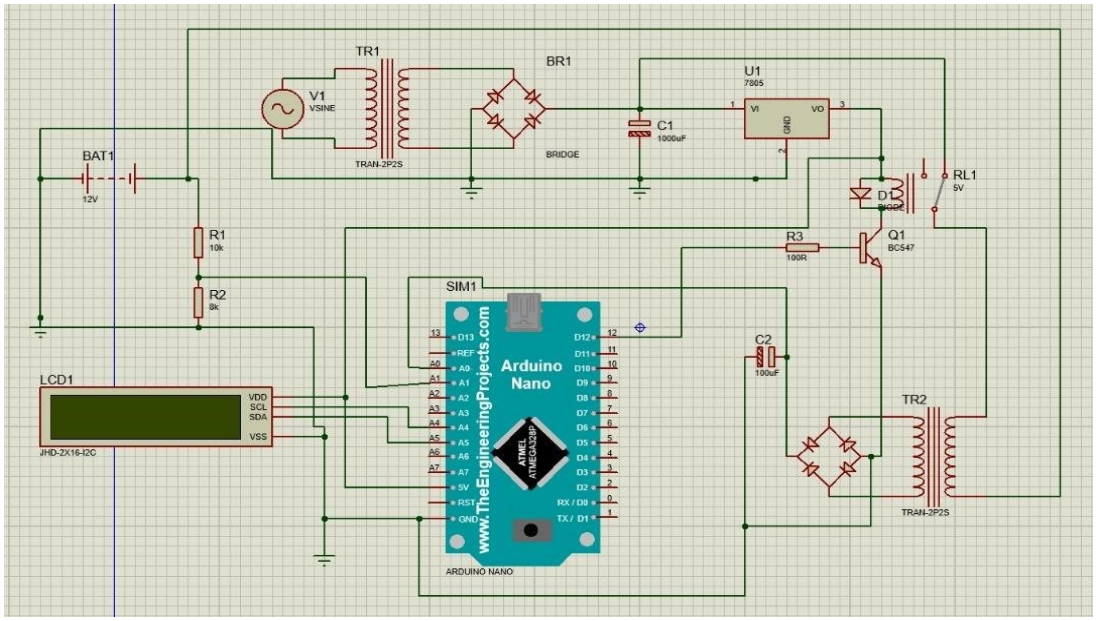

Figure 1: Proposed circuit diagram for battery charger

EDITOR-IN-CHIEF
Prof. Saeid Eslamian [IRAN]

Components were selected based on voltage/current ratings, switching frequency, thermal management, and cost (e.g., electromagnetic relays for switching and LC filters for output smoothing). A tiny controller unit (MCU) and Battery Management System (BMS) were included for control, monitoring, and safety. Breadboard prototyping was used initially for quick testing before completing a permanent design on a Vero board with soldered connections and custom copper traces. The assembled charger underwent testing procedures, including a power-on self-test, output verification, efficiency analysis, thermal evaluation, and safety feature checks. The final design was housed in an enclosure.

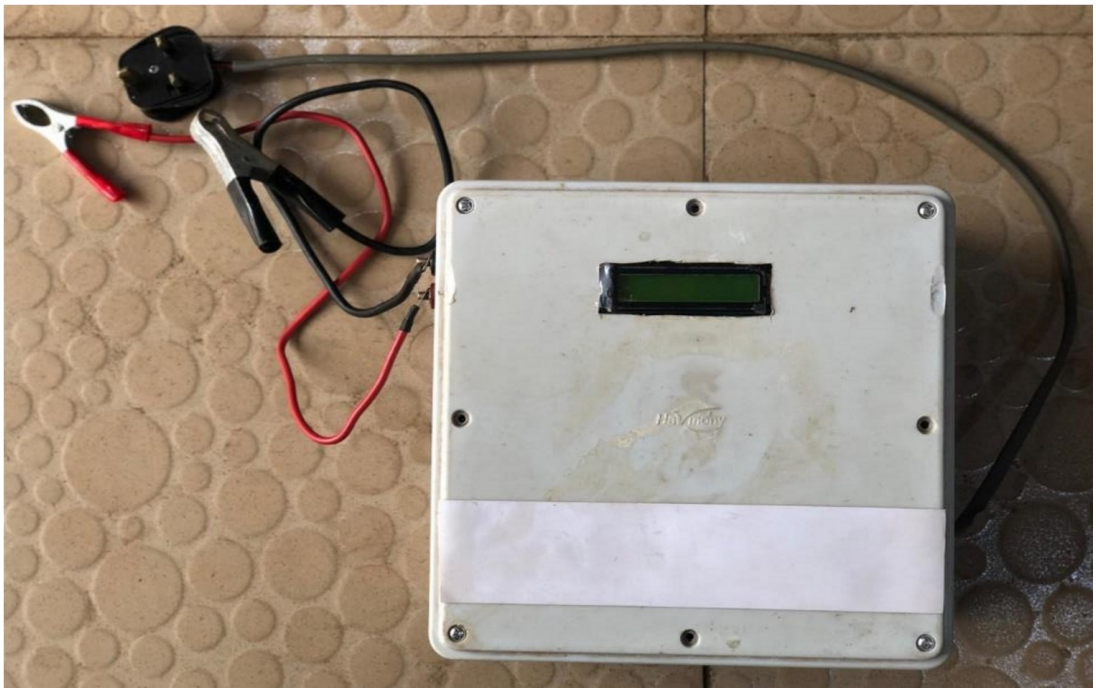

Figure 2: Battery Charger completely enclosed and packaged.

The charger's performance in a portable office setting was assessed using an experimental/case study design. A purposive sample technique was used to select one portable office for the evaluation. Primary parameters (current, voltage, and temperature) were measured with a multimeter; secondary data included industry benchmarks for efficiency and theoretical expectations.

Data Analysis:
Using software tools and descriptive analysis, secondary parameters (voltage regulation, current control, and charging/standby efficiency) were calculated from primary data. Strengths and limitations of the design could be found by comparing its performance to industry benchmarks and theoretical expectations. The outcome of this thorough process

EDITOR-IN-CHIEF
Prof. Saeid Eslamian [IRAN]

of design, execution, and evaluation was a 12V battery charger that is useful and practical for use with inverters.

RESULTS AND DISCUSSIONS

This examines data gathered with a multimeter while a 12V, 75 Ah battery is being charged. The battery voltage and matching charging current are displayed in Table 1 for various battery charge levels.

Table 1: Battery voltage at various charge levels and matching charging current

Battery Voltage level	Charging current
10.11	2.83
11.45	2.79
12.27	2.77
12.48	2.74
13.15	2.73
13.44	2.51
14.01	2.44

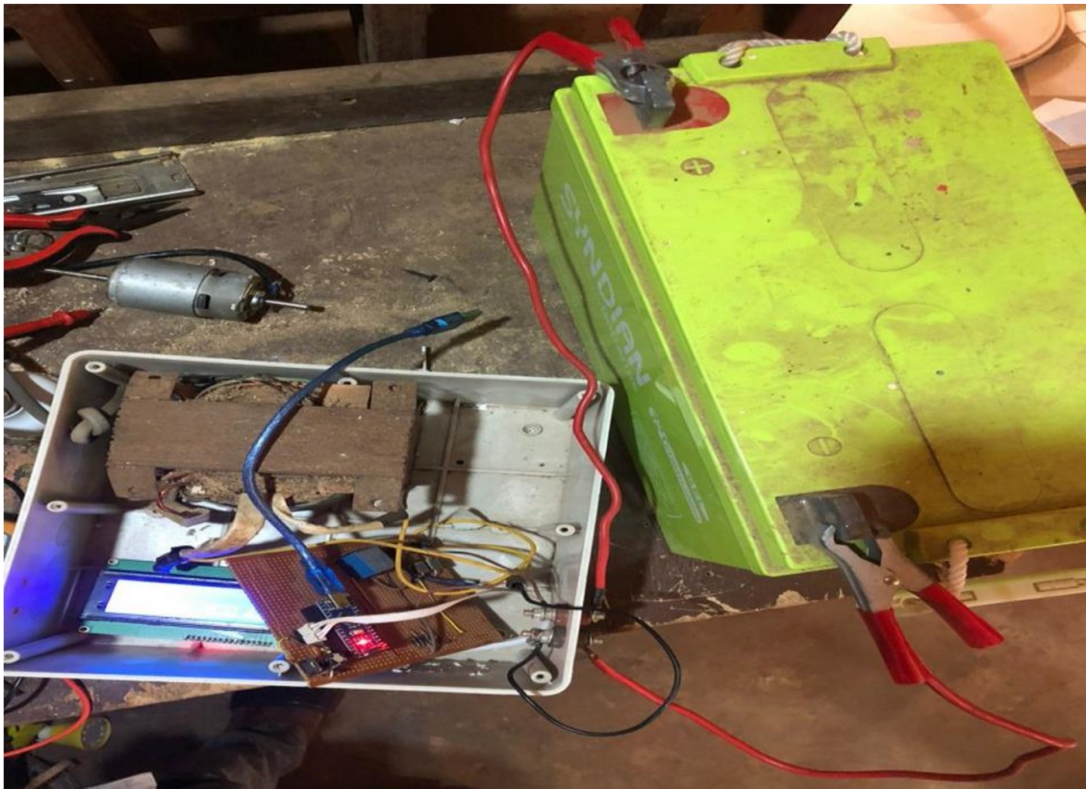

Figure 3: Battery Charger while charging a 12 V, 75 Ah battery.

EDITOR-IN-CHIEF
Prof. Saeid Eslamian [IRAN]

A relatively constant current of about 2.77A–2.74A between 12.27V and 12.48V suggests a potential transition between bulk and constant voltage stages. A significant drop in current at 13.44V (2.51A) shows the charger entering the float stage with trickle charging for a fully charged battery. Table 1 illustrates this behavior, which is typical of multi-stage chargers. In summary, the decrease in current as the voltage increases confirms a multi-stage charging profile that ensures both safe and effective charging. The stages in this charging profile are as follows: Bulk Stage (which rapidly replenishes the battery with a high current), Constant Voltage (which maintains a nearly constant voltage around 12.48V while gradually reducing current to prevent overcharging), and Float Stage (which starts at 13.44V and uses minimal current to keep a full charge without overtaxing the battery). The correlation between battery voltage and charging current can be shown in an X-axis scatter plot. For the Y-axis, Figure 3's battery voltage (V) is a good choice.

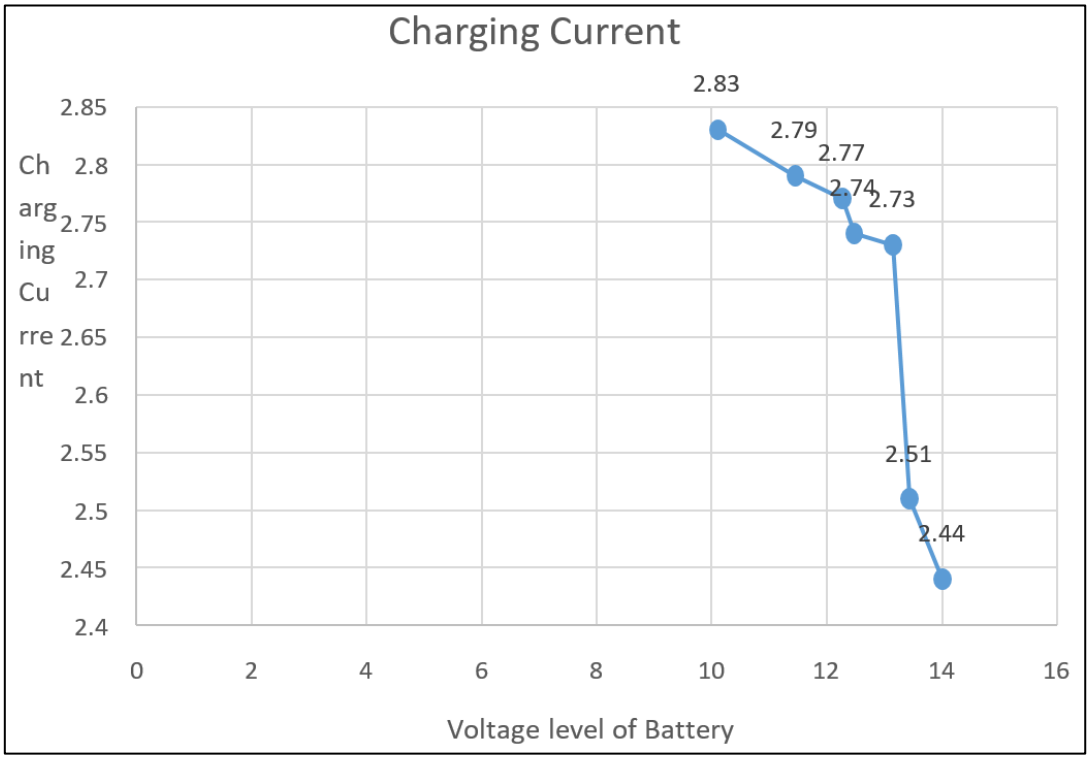

Figure 4: Graph showing the charging current against the voltage level of the battery. Using a multimeter, efficiency was measured.

The following values were noted to find the output voltage and current from the charger's transformer: 2.93A and 14.5V. The output voltage and current from the charger's output terminals were measured and found to be 12.51V and 2.83A, respectively. As a result,

EDITOR-IN-CHIEF
Prof. Saeid Eslamian [IRAN]

$$Values\ obtained\ at\ the\ chargers\ transformer\ output = 14.5 \times 2.93$$

$$The\ output\ power\ obtained\ from\ the\ battery\ terminals = 12.51 \times 2.83$$

$$Charging\ Efficiency = \frac{The\ output\ power\ obtained\ from\ the\ battery\ terminals}{Values\ obtained\ at\ the\ chargers\ transformer\ output}$$

$$= \frac{13.15 \times 2.73}{14.5 \times 2.93}$$

= 0.833 or 83.3%

Compared to the current criteria set by the Institution of Electrical and Electronics Engineers, IEEE (Youzheng et al., 2024) and the Battery Charger Manufacturers Association, BCMA (Lin, 2023), the charger shows a high charging efficiency of 83% (which is about 70% to 85% for domestic usage).

CONCLUSION

With a value of 83.3% charging efficiency, this research successfully constructed a 12V, 75Ah battery charger that complies with current IEEE and BCMVA requirements.

REFERENCES

Chen, X., Li, Q., Jin, F., Nabih, A., Chen, C., and Lee, F. (2021). a DC/DC converter with high density and efficiency designed for battery charger applications. 1767–1774: Applied Power Electronics Conference

Ngo, M., Yan, N., Dong, D., Burgos, R., Ismail, A., Cao, Y., and Yan, N. (2022). An 18-kW, 500-kHz, 98.8% efficient, high-density battery charger with partial power processing is designed and implemented. 10, 7963–7975, IEEE Journal of Emerging and Selected Topics in Power Electronics.

Arshadi, S. A., Botting, C., Craciun, M., Ordonez, M., and Eberle, W. (2021). Broad regulation and improved light-load performance are features of the three-phase LLC battery charger. IEEE Transactions on Power Electronics 36, 1519–1531.

Panda, A., Senapati, L., Lenka, R., Dash, A. R., and Tiwary, N. (2022). A GridInteractive Off-Board EV Battery Charger with Improved Power Quality Under

One Unified Control. IEEE Transactions on Electrification in Transportation, 1-1.

Locke, J., Dörfler, S., Walus, S., Abendroth, T., Härtel, P., Althues, H., Fotouhi, A., Auger, D., Shateri, N., and Kaskel, S. (2020). Recent developments and new fields of application for lithium-sulfur batteries. Technology of Energy, 9.

Henrik E. and Andreas N. (2019). White Paper: "Modelling the Lithium-ion battery," Comsol, Intertek, pp. 1–7, 2012.

Jackey, R. (2019). In 2007, SAE published a technical paper titled "A Simple, Effective Lead-Acid Battery Modelling Process for Electrical System Component Selection."

Undeland, T. O., Mohan, N., and Robbins, W. P. (2003). Power electronics: Applications, control, and converters. Wiley and Sons, John.

Krishnan, A., and V. Srinivasan (2017). Integration of power electronics in renewable energy systems. CRC Publishing.

Singh, S., Kumar, K., and Kumar, N. (2022) Creation of a multi-level switching 12V battery charger for a transformerless inverter. 8(1), 37–43, International Journal of Electronics and Computer Science.

Sharma, T., Kumar, V., and A. Kumar (2020). Design and build a battery charger for a 12V 1 kVA inverter using an H-bridge architecture. 9(8), 557–562, International Journal of Innovative Technology and Exploring Engineering.

Hussain, A., Ahmed, M. A., Alam, M. N., and Yousaf, Z. (2019). A comparison of fuzzy logic control and PWM for lead-acid battery charger performance in a 12V inverter system is presented. The International

EDITOR-IN-CHIEF
Prof. Saeid Eslamian [IRAN]

Conference on Electrical, Computer, and Communication Engineering (ECCE) 2019 has been published on pages 1-6. IEEE.

IEEE Transactions on Industrial Electronics, vol.71, no.7, pp.7063-7074, 2024; Youzheng Wang, Hongchen Liu, Huiying Yu, and Patrick Wheeler, "A Battery Wireless Charger with Full Load Range Soft-Switching Operation and ZeroSwitching-Loss Inverter".

Hui Lin, "Appliance and Equipment Standards Program", BCMA Equipment Dependability and Analytics, pp.301, 2023.

EDITOR-IN-CHIEF
Prof. Saeid Eslamian [IRAN]