E-ISSN: 1116 – 2716 P-ISSN: 3026-8214
MPRI-JAAE | INTERNATIONAL JOURNAL OF APPLIED & ADVANCED ENGINEERING RES.
VOL. 08 NO. 5 - APRIL, 2025

IMPROVING NIGERIA'S NORTH EAST 330/132KV POWER NETWORK PERFORMANCE USING STATCOM

[1]ABDULLAHI S. KITAKO; & [2]M. MUSTAPHA & [1]JOHN FULANI

[1]Department of Electrical & Electronics Engineering Federal Polytechnic Mubi, Adamawa State Nigeria. [2]

Corresponding Author: sajokitak@gmail.com
DOI: https://doi.org/10.70382/mejaaer.v8i5.014

Abstract

The increase in energy demand and persistent fluctuations is affecting the quality of power delivery in North-eastern Nigeria. One of the famous methods of dealing with power quality is by introducing Static Synchronous Compensator (STATCOM) to the system. Citing these STATCOMs become another point of interest. This paper focuses on optimizing the placement of STATCOM on Nigeria's North East 330/132kV transmission network to enhance the voltage profile and reduce system losses. The research involved modeling a 12-bus Flexible Alternating Current Transmission System (FACTS) of Nigeria's North East region using the Power System Analysis Toolbox (PSAT) in MATLAB. Particle Swarm Optimization (PSO) technique was implemented in MATLAB using graphical user interface (GUI), to identify the optimal placement of STATCOM in the network. Once the algorithm was executed, system administrators received SMS notifications regarding the best placement locations for the STATCOM. The study found that the optimal location for a single STATCOM placement was

Keywords: Voltage stability, Static Synchronous Compensator (STATCOM), Flexible Alternating Current Transmission System (FACTS), MATLAB/SIMULINK , Power System Analysis Toolbox (PSAT), Particle Swarm Optimization (PSO)

EDITOR-IN-CHIEF
Prof. Saeid Eslamian [IRAN]

at bus 11 (Yola 132 kV sub-transmission system), and a double placement, at buses 11 and 12 (Yola and Bauchi sub-transmission systems). The voltage improvement across the 12-bus network was significant, increased from 10.7738 p. u without STATCOM to 11.7425 p. u with a single STATCOM, and further to 12.06357 p. u with double placement. This means that the proposed approach can be used in improving power quality in North-Eastern Nigeria 330/132kV Transmission line.

Introduction

Modern power systems face significant challenges due to rising electricity demand, particularly in maintaining reactive power and managing voltage fluctuations(Alam et al., 2018)(Vijayan & Padma, 2013). Despite using traditional methods like excitation and voltage regulators at generating stations, tap-changing transformers, and shunt reactors, controlling bus voltage and voltage regulation along transmission lines remains difficult(Samson & Atuchukwu, 2021).Issues like voltage rise and drops persist even when using series capacitors in long Extra High Voltage (EHV) lines or compensations in substations, highlighting the ongoing struggle to ensure stable voltage within acceptable ranges during load fluctuations and voltage changes. Nigeria's power industry, once a major engineering success, is now facing the same challenges due to increasing electricity demand as a result of population growth (from 180 million to 206 million), and a fragile grid infrastructure(Aneke & Ngang, 2021). The grid suffers from poor voltage profiles, high transmission losses, and inadequate dispatch and control systems, leading to frequent system collapses and instability, especially in the North East power network. Despite efforts to increase generation capacity, the transmission capacity has not kept pace, resulting in overloaded systems, poor power quality, and outages.

Despite the government effort to privatized generation (GENCO) and distribution (DISCO) with aim of increasing generation capacity from 8,000 MW to 13,000 MW between 2015 and 2021, the power outages and technical losses persist, with the transmission system experiencing 40% losses (Ezechukwu & Edeh, 2021). To mitigate these, methods for reducing losses and enhancing system efficiency are needed. One proposed solution is using modern voltage control devices, such as the FACTS controller, to improve power transfer and system stability (Murali et al., 2010)(Hysics et al., 2015).which are performing to below expectation. Also,

EDITOR-IN-CHIEF
Prof. Saeid Eslamian [IRAN]

establishing new power stations and transmission lines for stable and high-quality electricity supply may be slow due to economic challenges. To address these issues, it's important to use efficient technologies that optimize existing power facilities, offering quick response times and low maintenance costs. This study explores the effect of improvement in applying STATCOM technology to the 330/132kV North East power transmission substation, using MATLAB/SIMULINK.

STATIC SYNCHRONOUS COMPENSATOR (STATCOM)

The STATCOM is a type of shunt-connected static var compensator used to regulate reactive power and maintain voltage stability in power systems. It can either generate or absorb reactive power, adjusting to voltage fluctuations: injecting power when voltage is low and absorbing it when voltage is high. The STATCOM consists of a Voltage Source Converter (VSC), which uses a DC capacitor to create a three-phase AC voltage, and is connected to the system through a coupling transformer(Uzowulu et al., 2019)(Kassahun et al., 2023). This helps with voltage regulation, reactive compensation, power factor correction, and harmonic filtering. Thus, allowing for precise control of reactive power without the need for large energy storage systems.

The reactive power adjustment is based on the comparison with the AC bus voltage, acting as inductive when the bus voltage is higher. The STATCOM can supply or absorb real power depending on the phase angle difference between the AC system and the VSC. Figure 1 shows schematic presentation of the VSC as connected into the power system. Equations (2) to (13) are based on the system analysis and derived from Figure 1.

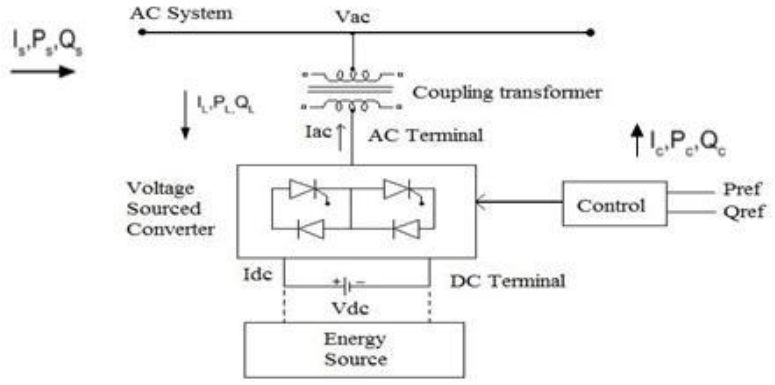

Figure 1: Simplified Model of STATCOM(Uzowulu et al., 2019).

X = Coupling transformer reactance,

V_S = RMS line-to neutral alternating current grid voltage with a phase angle of o referenced to the STATCOM side,
V_C = RMS line-to-neutral STATCOM fundamental voltage
I_S = RMS source current
I_L = RMS load current
I_C = RMS STATCOM current
Q_S= Source reactive power
Q_L= Load reactive power
Q_C = STATCOM reactive power
δ = Phase angle between the fundamental voltage of STATCOM and AC grid
Reactive power generation is zero when V_C equals V_S, when $V_C < V_S$, a current is generated that lags V_X. Because V_X, is in phase with V_S, this current also lags V_S. As a result, the Alternating Current grid perceives this current as inductive, and STATCOM is said to be inductively operating.
When $V_C > V_S$, a current is generated that trailsV_X. This current, however, leads V_S because V_X is in the opposite direction of V_S. As a result, the Alternating Current grid considers this current to be capacitive, and STATCOM is said to be in capacitive mode. STATCOM absorbs active power even at zero reactive due to converter losses as seen equations (1 and 2) or (3 and 4).

$$P_C \cong \frac{V_S V_C}{X} \sin \delta \qquad (1)$$

$$Q_C \cong V_S \frac{V_S - V_C}{X} \text{Cos } \delta \qquad (2)$$

Or

$$P_C \cong \frac{V_S V_C}{X} \delta \qquad (3)$$

$$Q_C \cong V_S \frac{V_S - V_C}{X} \delta \qquad (4)$$

Since V_C α V_d the relationship between V_C and the dc-link voltage V_d is expressed in terms of a constant K as shown in equation (5).

$$V_C = KV_d \qquad (5)$$

Equations (6) and (7) are derived by replacing equations (5) for (1) and (2).

$$P_C \cong \frac{V_S}{X} KV_d (\sin \delta) \qquad (6)$$

EDITOR-IN-CHIEF
Prof. H. U. Nwanjo [Nigeria]

$$Q_C \cong \frac{V_S}{X}(V_S - KV_d \cos\delta) \qquad (7)$$

Pulse Width Modulation (PWM) or Pulse Amplitude Modulation (PAM) techniques can be used to approximate the input voltage of VSC to pure sine wave at a fundamental frequency. By assuming a two-level line-to-neutral AC voltage, the peak value of the basic component of VSC input voltage (line-to-neutral) can be connected to dc-link voltage in terms of modulation index (m_a) as shown in (8).

$$V_C = m_a \frac{V_d}{2} \qquad (8)$$

Using (5) and (8), equations (9) and (10) are obtained:

$$K = \frac{m_a}{\sqrt[2]{2}} \cong 0.35 m_a \qquad (9)$$

$$V_C \cong 0.35 m_a V_d \qquad (10)$$

Substitution of (9) into (6) and (7), results in the derivation of equation (11) and (12).

$$P_C \cong \frac{0.35 V_S}{X} m_a \sin\delta \qquad (11)$$

$$Q_C \cong \frac{V_S}{X}(V_S - 0.35 m_a V_d \cos\delta) \qquad (12)$$

This assumption reduces the term to 0.35mVd and makes it easier to control. As a result, one of the following strategies can be used to manage the reactive power absorbed or delivered by STATCOM:
Changing the modulation index (ma) while maintaining the direct current link voltage v_d,Varying v_d while leaving (ma) constant, or Combining the first two options

MATERIALS AND METHODS

The materials used in conducting this research are PSAT software, MATLAB/SIMULINK, North East 330/132kV single line schematic, and transmission line operational data, GSM Module, and Microcontroller (Arduino nano).

Table 1. Transmission Line Parameters in P.U on 100MVA Base

EDITOR-IN-CHIEF
Prof. H. U. Nwanjo [Nigeria]

S/N	Name of Branch	Type	Length (km)	Rated Voltage (kV)	Current Limit (A)	R (p.u)	X (p.u)	B (p.u)
i.	Jos-Gombe	Bison	265	330	1360	0.0095	0.051	1.010
ii	Jos-Bauchi	Bison	118	132	400	0.140	0.280	0.057
iii	Bauchi-Gombe	Bison	146	132	306	0.172	0.344	0.042
iv	Gombe-Biu	Hyena	126	132	400	0.221	0.311	0.059
v	Biu-Damboa	Wolf	92	132	400	0.162	0.227	0.042
vi	Gombe-Ashaka Junction	Hyena	84	132	400	0.098	0.197	0.041
vii	Ashaka/junction-Factory	Hyena	10	132	306	0.118	0.024	0.005
Viii	Ashaka -Potiskum	Wolf	94	132	306	0.110	0.221	0.046
Ix	Gombe-Savannah	Hyena	95	132	306	0.166	0.233	0.044
X	Savanah-Numan	Hyena	85	132	306	0.149	0.211	0.039
Xi	Numan-Yola	Hyena	50	132	306	0.087	0.123	0.023
Xii	Damboa-Maiduguri	Wolf	85	132	400	0.149	0.209	0.039

Source: Jos Electricity Distribution Company (JEDCO) Gombe, Nigeria, (2018).

Table 2 Bus Data of the Transmission Network

Bus No.	Bus Name	Bus Voltage (kV)	Average load on Bus (MW)	Real Power P(MW)	Reactive Power Q(MVAR)
1	Jos	330	98.30	50.00	20.00
2	Gombe	132	23.40	20.01	16.01
3	Biu	132	4.80	1.50	1.20
4	Damboa	132	11.90	1.21	0.98
5	Maiduguri	132	76.60	32.50	26.01
6	Ashaka junction	132	30.00	9.10	6.00
7	Potiskum	132	28.00	15.5	8.90
8	Ashaka Cement Factory	132	3.51	1.40	2.40
9	Savannah	132	3.60	2.81	2.20
10	Numan	132	3.60	2.80	2.30
11	Yola	132	41.80	9.00	3.60
12	Bauchi	132	30.00	30.00	24.02

Source: Jos Electricity Distribution Company (JEDCO) Gombe, Nigeria, (2018).

METHODOLOGY

EDITOR-IN-CHIEF
Prof. H. U. Nwanjo [Nigeria]

Location of a Single and Two STATCOMs using PSO Algorithm

PSO algorithm is used to obtain the best position to locate a single and two STATCOMs into North East 330/132kV power network to determine its optimal placement. The network is run using PSO algorithm program codes. Using the Objective function of PSO.

The objective function (J) is an r.m.s value of voltage deviation. It is taken as shown in equation (13)

$$J = \sqrt{\sum_{i=1}^{12}(V_i - 1)}^{\ 2} \qquad (13)$$

The main objective is to minimize the voltage deviation from the nominal and achieve good voltage stability in the power system network PSO parameters are taken and applying hit and trail method. The following are the parameters taken for the PSO analysis:

a. A constant inertia weight W_1 is taken as a function which decrease randomly from 0.9 to 1.
b. Number of particles taken is 5 with random initial STACOM position.
c. Two constants were taken, the acceleration constant and the social acceleration constant. The individual acceleration constant is the constant used to show the impact of individual particle best position gain by particle itself on the next value of velocity of that particle denoted by C_1. For this study it is taken as $C_1 = 2.6$. Social acceleration constant is the constant used to show the effect of best position gained by any particle (gbest) on the next value of velocity of that particle denoted by C_2. Similarly, for this study it is taken as $C_2 = 1.4$.
d. No of iterations taken is 10 for a single STATCOM and 30 for two STATCOMs. the results tabulated, wherever a STATCOM is located in the buses and the power flow is run using PSAT.

For each case i.e. with a single STATCOM and with two STATCOMs the power network is run using PSO algorithm program codes. The outcomes for each scenario are contrasted between the base case (without compensation), in which STATCOM is not used, and the enhanced case (with compensation), in which STATCOM is used. The real/reactive power generated and power losses are

EDITOR-IN-CHIEF
Prof. H. U. Nwanjo [Nigeria]

recorded for each bus, with by contrasting the outcomes with and without STATCOM, one can determine the effectiveness of STATCOM

Network Modelling and Simulation using PSAT.

The 12-bus North East 330/132 kV transmission network is modeled and simulated using PSAT in the MATLAB environment to achieve the research objectives. The network includes three types of buses: load buses, generator buses, and slack (PV) buses. Data for buses, transmission lines, and generators are used in the simulation. The power flow analysis utilizes several techniques, including the following steps:

a. The power flow of the existing network is run without STATCOM, establishing the base case. This base case provides data on voltage levels, real/reactive power, and power losses at all buses.
b. Locate single STATCOM one by one, into the buses so as to find its best position of placement.
c. Locate two STATCOMs into the buses, using PSO technique to find its optimal location in the power network.
d. Examines real/reactive power flow control and power losses in the network with and without STATCOM.

The purpose is to investigate the impact of STATCOM devices on improving the voltage level of the North East 330/132 kV, 12-bus power network. The methodology is implemented using the PSAT GUI in the MATLAB environment.

Network design

Using the PSAT/SIMULINK environment, a single-line diagram of the North East 330/132 kV, 12-bus power network was created by dragging and dropping symbols of buses, generators, transmission lines, and other components, as shown in Figure 2. The power network bus data from Table 2 and the transmission line parameters from Table 1 were entered into the system. Figure 2 illustrates the single-line diagram of the power network as designed in the PSAT GUI environment.

EDITOR-IN-CHIEF
Prof. H. U. Nwanjo [Nigeria]

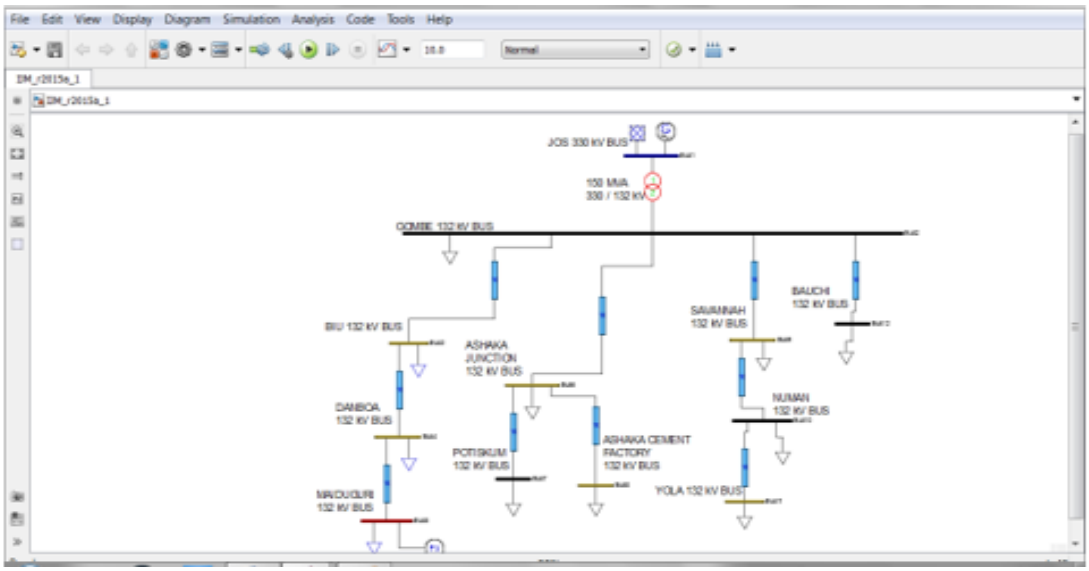

Figure 2: Network Model without STATCOM in PSAT MATLAB Environment

Voltage level without STATCOM (base case)

The base case is established by running the power flow of the existing network in PSAT/SIMULINK mode, as shown in Figure 2, without using STATCOM. The Power Flow Static report, which omits STATCOM, provides data on voltage magnitude, real and reactive power generation, power losses, and total power generation at each bus. This report can be accessed through the PSAT GUI, as depicted in Figure 3.

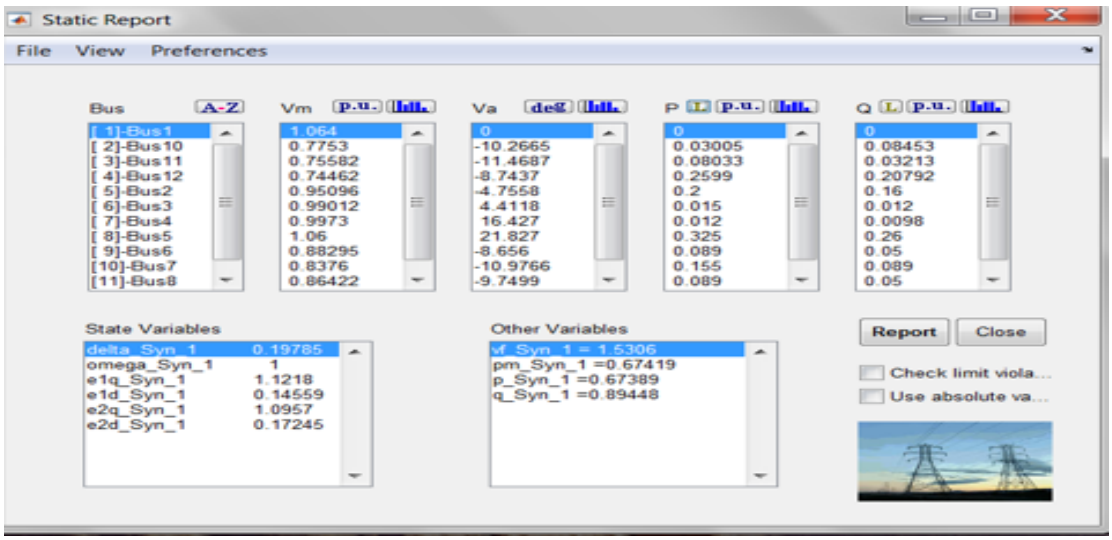

Figure 3: GUI Power Flow Static Report of PSAT in MATLAB Environment

EDITOR-IN-CHIEF
Prof. H. U. Nwanjo [Nigeria]

Voltage Level with Single STATCOM

The power network buses built in PSAT in the MATLAB environment are then each given a single STATCOM, with the exception of slack bus-1 and PV bus-5.

Location of STATCOM at bus-2

Figure 4 shows a STATCOM at bus-2, and power flow is run to produce results with compensation. The static report includes voltage magnitude, real/reactive power generated, losses, and total power at bus-2 with the STATCOM.

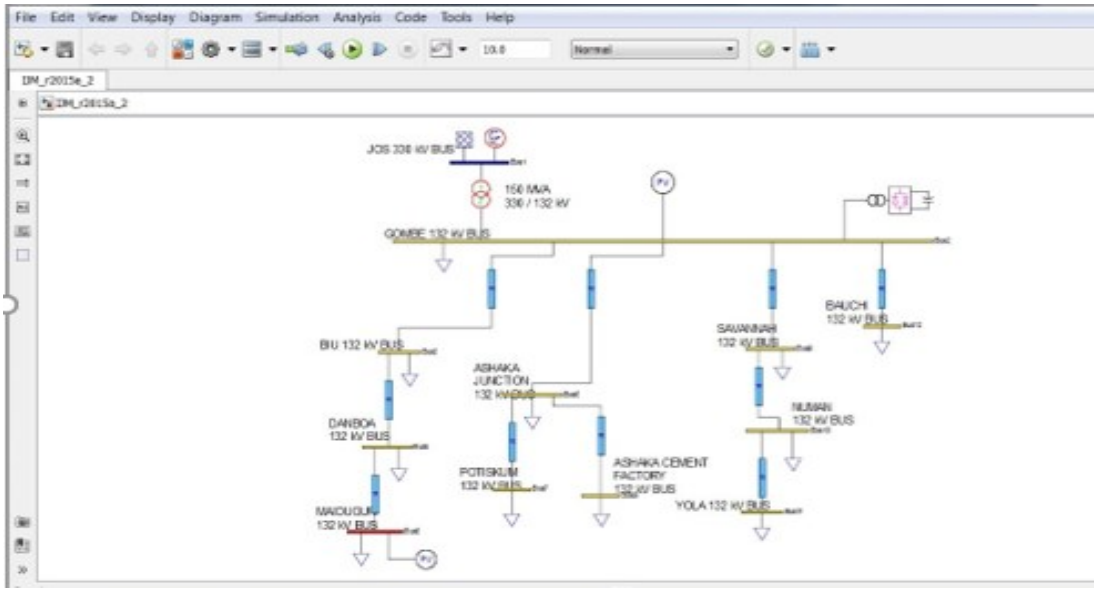

Figure 4: Network Model with STATCOM at bus-2 in PSAT MATLAB Environment

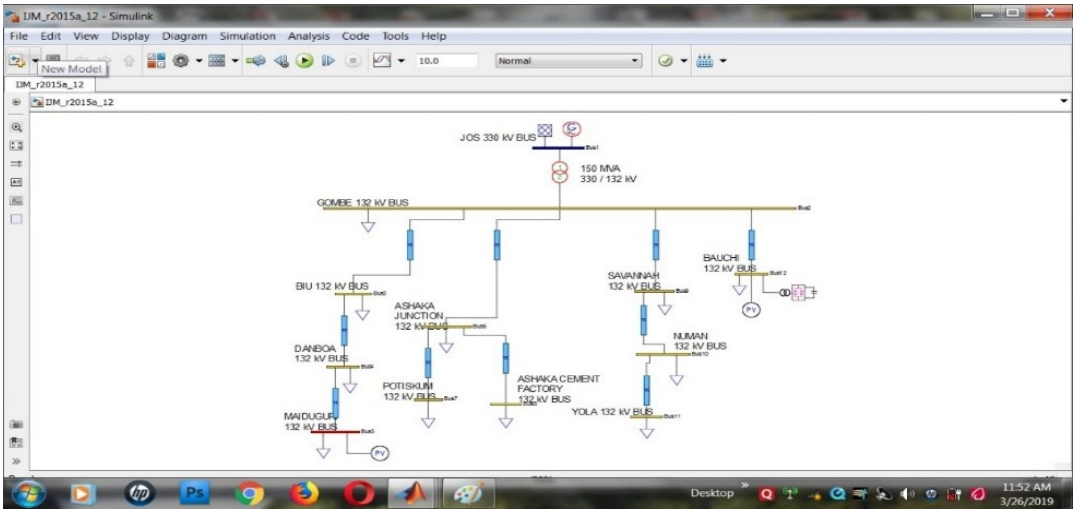

Figure 5: Network Model with STATCOM at bus-12 in MATLAB Environment.

The process continued as described in the previous scenarios by locating a single STATCOM one by one into the remaining buses 3,4, 6, 7, 8, 9, 10, 11 and 12.

Power GUI design

The graphics user interface was designed programmatically using MATLAB. Figure 6 shows the designed GUI

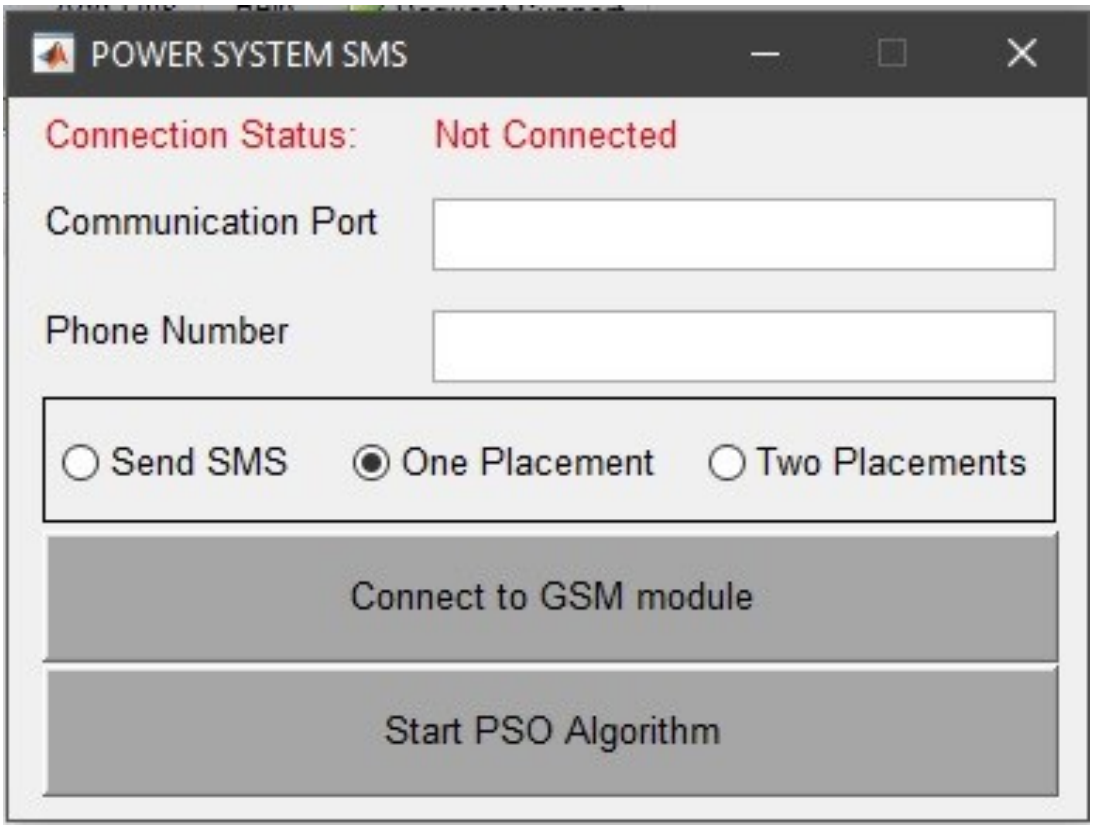

Figure 6: Power system GUI

RESULTS

Following a successful implementation and conducting of the set up as in figure2 to 6, the results obtained are presented and discussed under this section.

Simulation Results without STATCOM (Base Case)

Table 3. displays the power flow results for the system without a STATCOM, including the voltage profile and the real and reactive power generated. Figure 7 shows a bar graph of the voltage magnitudes as a function of the power network's buss number.

Table 3: Voltage Magnitude without STATCOM (Base Case)

Bus No	V m (p.u)	Phase (Deg.)	P gen (p.u)	Q gen (p.u)	P Load (p.u)	Q Load P.u)
1	1.06400	0.00000	0.67389	0.89448	0.00000	0.00000
2	0.95096	-4.75580	0.00000	0.00000	0.20000	0.16000
3	0.99012	-4.41180	0.00000	0.00000	0.01500	0.01200
4	0.99730	16.42700	0.00000	0.00000	0.01200	0.00980
5	1.06000	21.82700	0.80000	0.25553	0.32500	0.26000
6	0.88295	-8.65600	0.00000	0.00000	0.08900	0.05000
7	0.83760	-10.97660	0.00000	0.00000	0.15500	0.08900
8	0.86422	-9.74990	0.00000	0.00000	0.08900	0.05000
9	0.85091	-6.85091	0.00000	0.00000	0.02800	0.02200
10	0.77530	-10.26650	0.00000	0.00000	0.03005	0.08453
11	0.75582	-11.46870	0.00000	0.00000	0.08033	0.03213
12	0.74462	-8.74370	0.00000	0.00000	0.25990	0.20792

Figure 7 shows that voltage magnitudes at various buses vary, with bus-12 having the lowest voltage and nearby buses also experiencing low voltage. Most bus voltages fall below the acceptable 0.95 to 1.05 p.u. range, while bus-1 (slack) and bus-5 (PV) have higher voltage values.

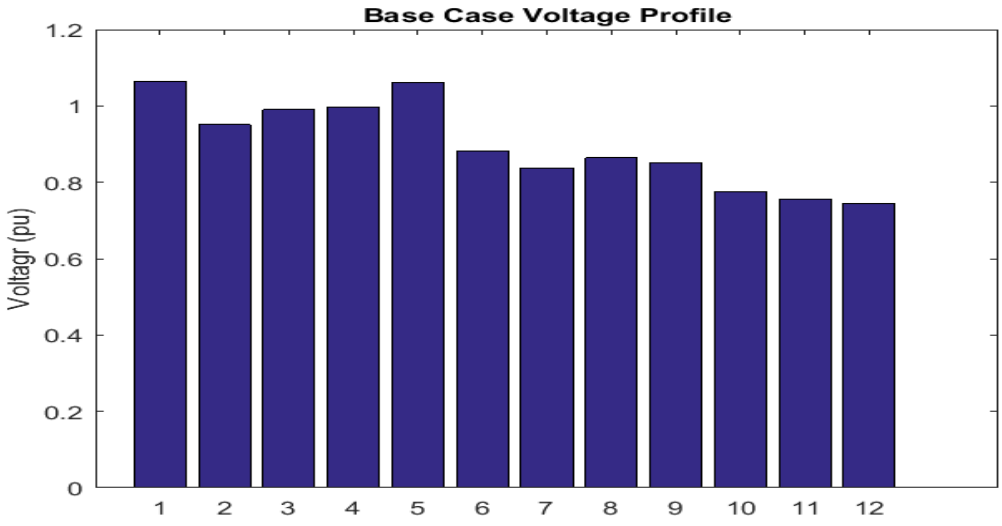

Figure 7: Voltage Magnitude without STATCOM (Base Case)

EDITOR-IN-CHIEF
Prof. H. U. Nwanjo [Nigeria]

Location of a Single STATCOM

Placing the STATCOM at various buses, excluding PV bus-5 and slack bus-1, to determine the best location for power enhancement, the main goal is to identify the optimal position to raise the voltage level across the network.

Results for Locating STATCOM at bus-2

Placing a STATCOM at bus-2 raised the voltage level, but most values remained outside the 0.95-1.05 p.u. constraint. This show that the improvement did not achieve optimal results.

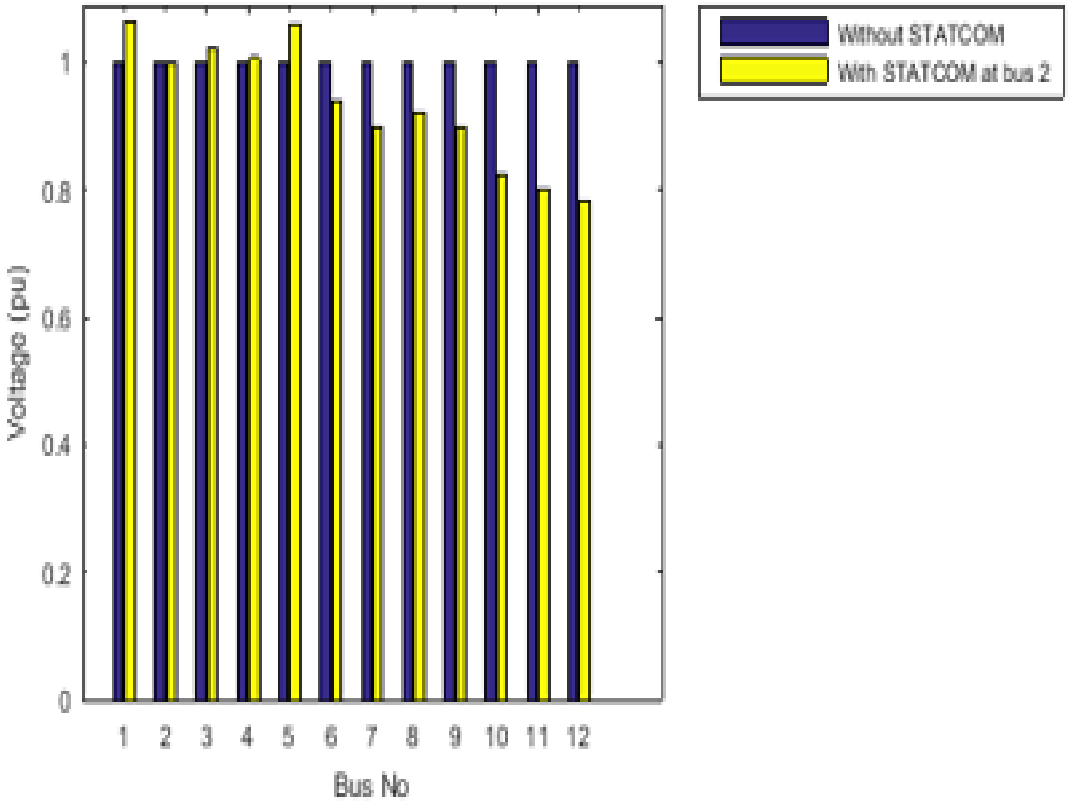

Figure 8: Voltage Magnitude with Single STATCOM at Bus-2

Locating STATCOM at bus-12

Placing a STATCOM at bus-12 improved the voltages of most buses to fall between 0.942 p.u. and 1.05 p.u., with some nearing the voltage limit. This configuration produced the best results, this is because voltage magnitudes improved across all buses.

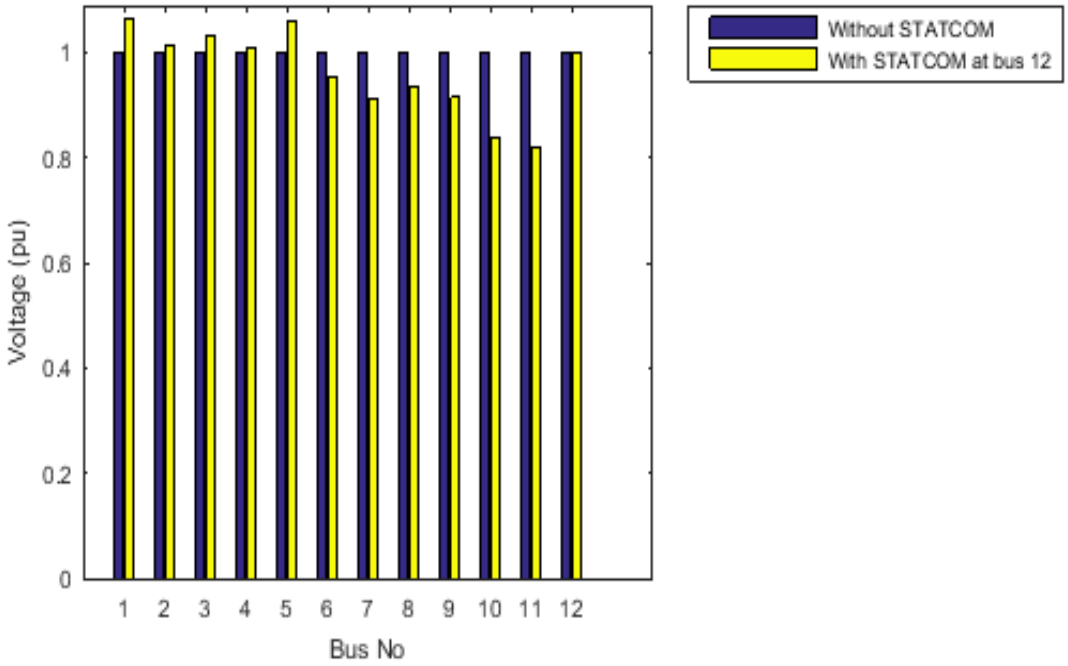

Figure 9: Voltage Magnitude with a Single STATCOM at Bus-12

Table 4: Bus Voltage Magnitude with a Single STATCOM at bus 12

Bus	Voltage magnitude with STATCOM at each bus									
no	2	3	4	6	7	8	9	10	11	12
1	1.064	1.064	1.064	1.064	1.064	1.064	1.064	1.064	1.064	1.064
2	1.000	0.954	0.951	0.993	0.984	0.982	0.986	0.979	0.977	1.020
3	1.023	1.000	0.992	1.018	1.012	1.011	1.013	1.010	1.007	1.031
4	1.007	1.004	1.000	1.006	1.004	1.004	1.005	1.003	1.003	1.010
5	1.060	1.060	1.060	1.060	1.060	1.060	1.060	1.060	1.060	1.060
6	0.939	0.887	0.884	1.000	0.976	0.970	0.923	0.916	0.913	0.953
7	0.901	0.842	0.838	0.962	1.000	0.930	0.881	0.872	0.870	0.942
8	0.922	0.868	0.865	0.985	0.960	1.000	0.906	0.900	0.895	0.945
9	0.900	0.854	0.851	0.892	0.882	0.880	1.000	0.971	0.961	0.940
10	0.823	0.778	0.776	0.814	0.805	0.802	0.937	1.000	0.983	0.956
11	0.802	0.759	0.756	0.794	0.784	0.782	0.920	0.984	1.000	0.960
12	0.783	0.747	0.745	0.777	0.771	0.769	0.772	0.767	0.765	1.000

EDITOR-IN-CHIEF
Prof. H. U. Nwanjo [Nigeria]

PSO Based Optimal Location of a Single STATCOM.

The PSO findings for determining the optimal location of a single STATCOM in the North East 12-bus, 330/132 kV power network are shown in Figure 8 and Table 4. The PSO algorithm identified bus-12 (Bauchi) as the ideal position for a single STATCOM, which aligns with the results obtained from placing the STATCOM at bus-12. This shows that the findings match those from the PSAT/SIMULINK environment and demonstrate that the power flow results from PSO are consistent with those from the bus-by-bus placement, as illustrated in Table 4.

PSO Based for Optimal Location of Two STATCOMs

Finding the optimal location for a single STATCOM is straightforward when placing it on each of the 12 buses individually. However, determining the best placement for two STATCOMs is more complex. The PSO optimization technique simplified and speed up the process of optimally placing two STATCOMs in the power network. The results of the PSO algorithm for placing STATCOMs at buses 11 and 12 are shown in Figure 10.

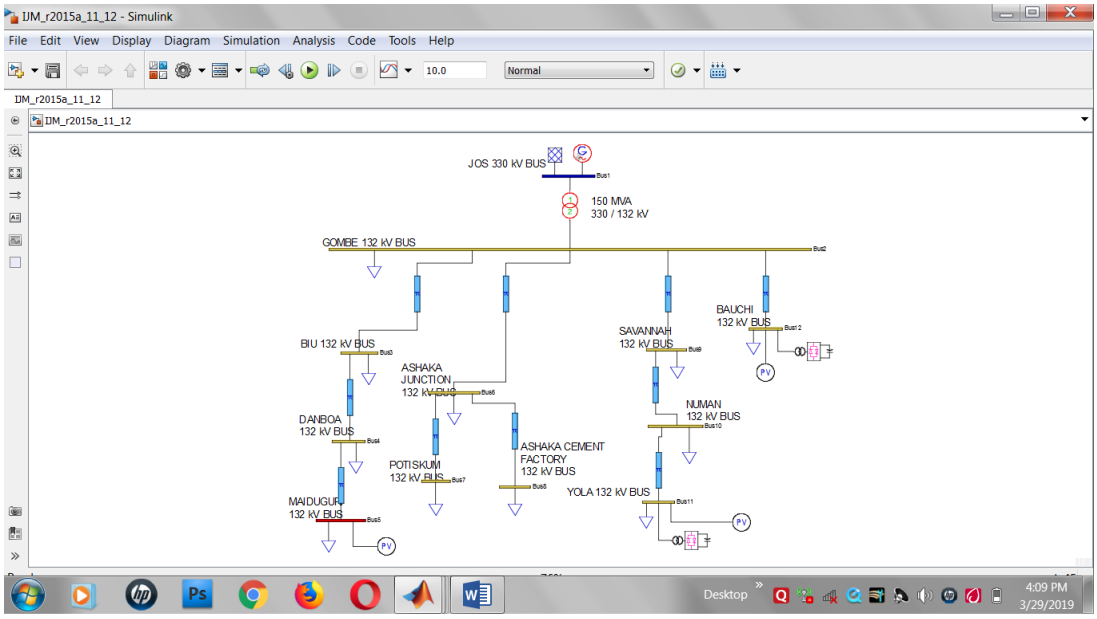

Figure 10: PSO algorithm Setting of Two STATCOMs in PSAT MATLAB Environment

The power flow results for the PSO algorithm, used to determine the optimal positions for two STATCOMs in the 12-bus network, are shown in Table 5. Figure

EDITOR-IN-CHIEF
Prof. H. U. Nwanjo [Nigeria]

10 plots the bus voltage magnitudes against bus numbers after adding two STATCOMs. The addition of two STATCOMs resulted in a better voltage profile compared to a single STATCOM, improving the real and reactive power generation, voltage magnitude, and reducing power losses. The PSO algorithm identified buses 11 (Yola) and 12 (Bauchi) as the optimal locations for the two STATCOMs. With double STATCOMs, this is because at these places, the voltage improved to a range of 0.95051 p.u. to 1.064 p.u., within the acceptable limits. The placement of STATCOMs significantly impacted the power flow, with increased reactive power injection when using two STATCOMs.

Table 5: Bus Voltage Magnitude with Two STATCOMs

Bus No	V m (p.u)	Phase (Deg)	P gen (p.u)	Q gen (p.u)	P Load (p.u)	Q Load (p.u)
1	1.06400	0.00000	0.69383	0.28687	0.00000	0.00000
2	1.02720	-4.75470	0.00000	0.00000	0.20000	0.16000
3	1.04070	4.13650	0.00000	0.00000	0.01500	0.01200
4	1.01300	15.81280	0.00000	0.00000	0.01200	0.00980
5	1.01300	21.72500	0.80000	0.18103	0.32500	0.26000
6	0.97010	-8.14900	0.00000	0.00000	0.08900	0.05000
7	0.95051	-10.08350	0.00000	0.00000	0.15500	0.08900
8	0.95389	-9.07260	0.00000	0.00000	0.08900	0.05000
9	0.99528	-8.88150	0.00000	000000	0.02800	0.02200
10	0.99289	-12.40850	0.00000	0.00000	0.03200	0.09000
11	1.00000	-14.11920	0.00000	0.12053	0.09000	0.03600
12	1.00000	-14.61250	0.00000	0.00000	0.30000	0.24000

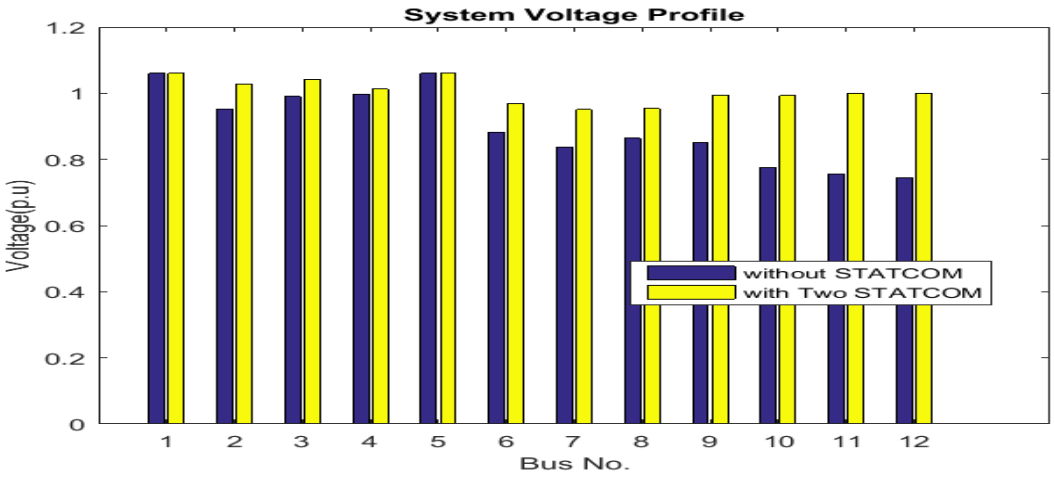

Figure 11: Voltage Magnitude with Two STATCOMs

EDITOR-IN-CHIEF
Prof. H. U. Nwanjo [Nigeria]

Table 6: Voltage Profile of the Network with and Without STATCOM

Bus no	Voltages without STATCOM (p.u)	Voltages with single STATCOM (p.u)	Voltages with two STATCOM (p.u)
1	1.06400	1.06400	1.06400
2	0.95096	1.01200	1.02720
3	0.99012	1.03060	1.04070
4	0.99730	1.00990	1.01300
5	1.06000	1.06000	1.06000
6	0.88295	0.95284	0.97010
7	0.83760	0.94220	0.94651
8	0.86422	0.93616	0.95389
9	0.85091	0.91462	0.99528
10	0.77530	0.94010	0.99289
11	0.75582	0.88010	1.00000
12	0.74462	1.00000	1.00000
Total	10.7738	11.74252	12.06357

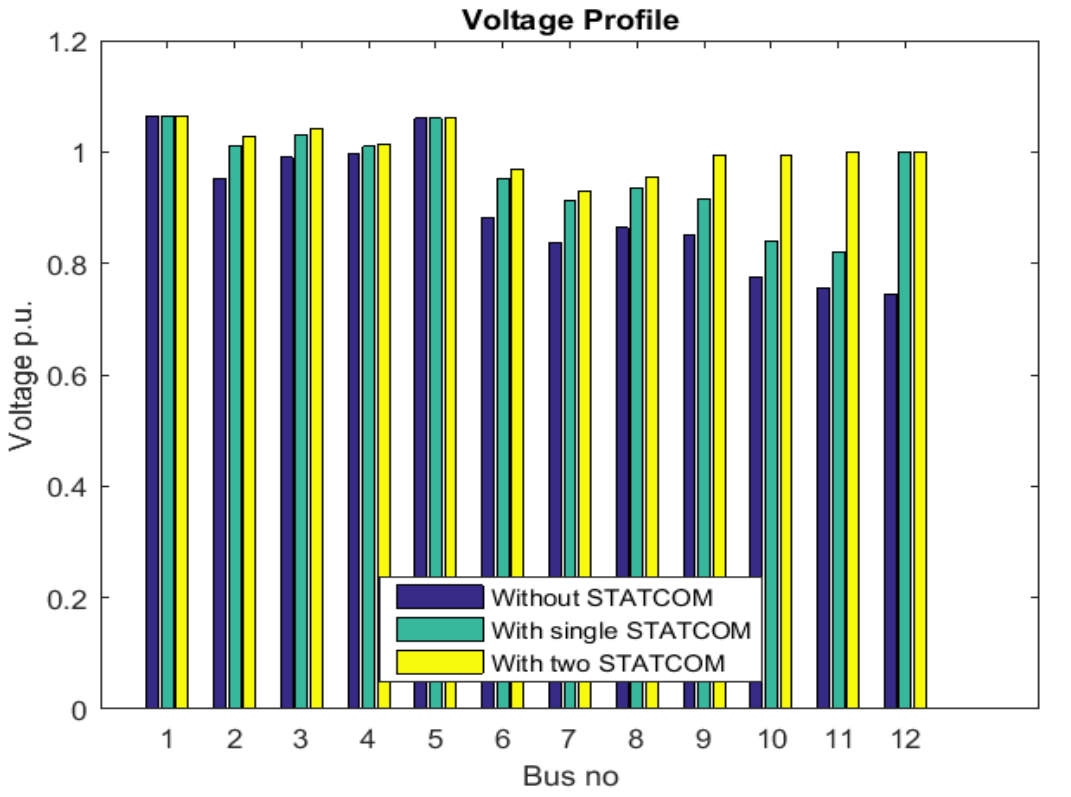

Figure 12: Voltage Magnitude with Single and Two STATCOMs

EDITOR-IN-CHIEF
Prof. H. U. Nwanjo [Nigeria]

Location of STATCOM for Real and Reactive Power Control

The reactive power generated by the power system with STATCOM at each bus is shown in Table 7 and illustrated in Figure 13. From these, it shows that the location of STATCOM impacts reactive power generation. This is because the buses containing STATCOM exhibiting higher reactive power.

Table 7: Total Power Generation on the Network with STATCOM

STATCOM at buses	Total real power generation (p.u)	Total reactive power generation (p.u)
2	1.407	1.158
3	1.475	1.142
4	1.474	1.148
6	1.509	1.088
7	1.503	1.100
8	1.501	1.105
9	1.505	1.088
10	1.497	1.086
11	1.498	1.093
12	1.507	1.043

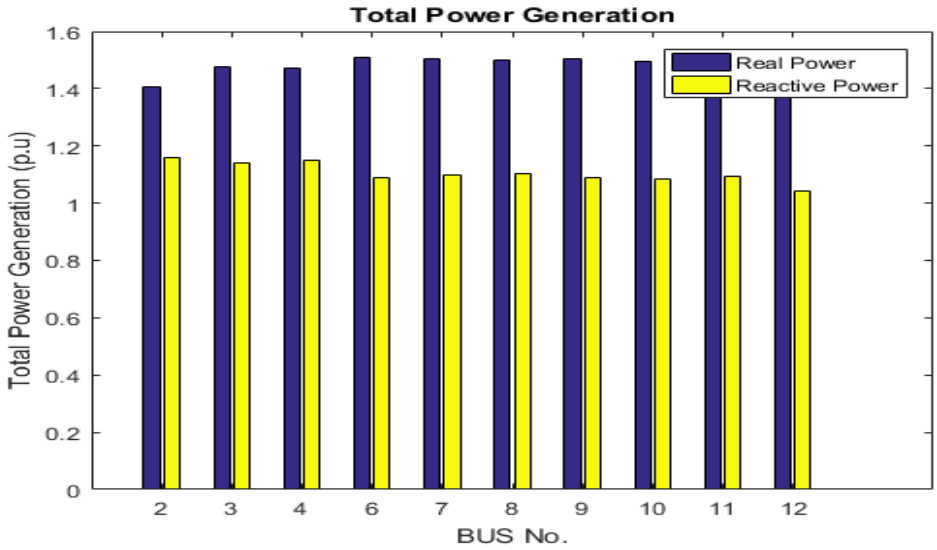

Figure 13: Total Real and Reactive Power Generation with Single STATCOM at Each Bus

Conclusion

The study focused on implementing STATCOM and identifying its optimal location across 12 buses in the North East 330/132 kV power network, using PSO algorithm. A single STATCOM was installed on each bus, and the PSO algorithm was used to find the best location for one or two STATCOMs. After analyzing the results with and without STATCOM, the following were observed.

a. By properly controlling the flow of actual and reactive power, the optimal placement of STATCOM improves the voltage level for the North East 330/132 kV, 12-bus power network, operating within a range of $0.95 \leq v \leq 1.05$ p.u.
b. Compared to using a single STATCOM, the proper placement of two STATCOMs on the power network significantly increased the voltage magnitude at a higher value.
c. By placing one STATCOM at bus-12 and two STATCOMs at buses 11 and 12, the network was able to operate at its peak capacity. Also, a text massage of p best = bus 12 was sent to 08064312377 (system administrator) for easy location of the best placement of STATCOM. The voltage improvement across the 12-bus network was significant, increases from 10.7738 p. u without STATCOM to 11.7425 p. u with a single STATCOM, and further to 12.06357 p. u with double placement.

References

Alam, M. A., Banerjee, S., & Krishnatreya Bhattacharya C.K. Panigrahi. (2018). Power loss Reduction & Enhancement of power transfer capability with STATCOM & TCSC using Sensitivity Analysis. *International Conference on Recent Innovations in Electrical, Electronics & Communication Engineering - (ICRIEECE)*, 3110–3115.

Aneke, N. E., & Ngang, N. . (2021). Improving the Efficacy of the Nigerian Electric Power Transmission Network Improving the Efficacy of the Nigerian Electric Power Transmission Network Using Static Synchronous Compensator (STATCOM). *Journal of Information Engineering and Applications*, *11*, *No.2*,(May). https://doi.org/10.7176/JIEA/11-2-02

Ezechukwu, O. A., & Edeh, M. O. (2021). *Voltage Profile Improvement of Nigeria 330kv Power System Using STATCOM Device*. *4*(12), 110–126.

Hysics, D. E. O. F. P., Niversity, F. E. U., Griculture, O. F. A., & Beokuta, A. (2015). Application of static synchronous compensator (STATCOM) in improving power system performance: A case study of the Nigeria 330 kV electricity grid. *Nigerian Journal of Technology (NIJOTECH)*, *34. No.3*(jul), pp.564-572.

Kassahun, H. E., Salau, A. O., Osaloni, O. O., & Olaluyi, O. J. (2023). Power System Small Signal Stability Enhancement Using Fuzzy Based STATCOM. *Przeglad Elektrotechniczny*, 99(8), 27–32. https://doi.org/10.15199/48.2023.08.05

EDITOR-IN-CHIEF
Prof. H. U. Nwanjo [Nigeria]

Murali, D., Rajaram, M., & Reka, N. (2010). Comparison of FACTS Devices for Power System Stability Enhancement. *International Journal of Computer Applications*, *8*(4), 30–35. https://doi.org/10.5120/1198-1701

Samson, O. C., & Atuchukwu, A. J. (2021). Voltage Profile Enhancement in The Nigeria 330kv Line Using STATCOM. *IRE Journals*, *4*(7), 78–85.

Uzowulu, E., Nnanedu, I., Atuchukwu, J., & Iloh, J. (2019). Reactive Power Compensation for Reduction of Losses in Nigeria 330kV Network Using Static Compensator. *IRE Journals*, *3*(1), 9–30.

Vijayan, A., & Padma, S. (2013). Maintaining Voltage Stability in Power System using FACTS Devices. *International Journal of Engineering Science Invention*, *2*(2), 20–25.

EDITOR-IN-CHIEF
Prof. Saeid Eslamian [IRAN]