E-ISSN: 1116 – 2716 P-ISSN: 3026-8214
MPRI-JAAE | INTERNATIONAL JOURNAL OF APPLIED & ADVANCED ENGINEERING RES.
VOL. 08 NO. 5 - APRIL, 2025

DESIGN OF MICROCONTROLLER BASED SECURITY DOOR/RAIN DETECTOR USING MEMORY CARD

KENNETH UGO UDEZE; & MEZUE FRANCIS CANICE TOCHUKWU

Department of Electrical & Electronics Engineering, Federal Polytechnic Oko, Anambra State. Nigeria.

Corresponding Author: princeken2003@gmail.com

DOI: https://doi.org/10.70382/mejaaer.v8i5.015

Keywords: Rain Water, Rain Sensor, Buzzer, Microcontroller, keypad, motor, Transistors

Abstract

Advances in technology led to the use of passwords in the door/gate mechanism but researchers approved that there is the human limitation in which the average human memory limit is at most nine-digit password combination and many users often write down password thus increasing the possibility of security breach. Hence to reduce or eliminate the access of unauthorized person to offices, at the administrative blocks, warehouses etc., the research to design a microcontroller-based security door detector using micro memory card and an automatic rain detector for the windows was conceived. This research is to provide a two-way factor authentication, which uses a card and a PIN code for door access authentication. The work also incorporates a rain detector for shutting the windows automatically when it rains. If the card is not recognized, access will not be granted or if the Pin entered is incorrect trice, [redacted] the card will become unusable again and access is denied. Automatic shutting of the window is achieved through the use of a sensor and its associated circuit, which operates a motor that closes the window as soon as rain splashes on the sensor. When it stops raining and the water on

EDITOR-IN-CHIEF
Prof. Saeid Eslamian [IRAN]

the has dried up the window should open. However, there is a provision for manual closure of the window when need be. The complete project was programmed such that the two-way door only close twenty seconds after granting access by opening the door. In the case of automatic window shutter, there is a delay period for the water on the sensor to dry up (depending on the ambient temperature) before the window can open again when the rain stops. However, it is possible to manually open the window to avoid the delay. In conclusion, this project has so many applications such as residence, hotels, offices and even cars when the design is modified.

Introduction

Creation of secured access path to office, home and administrative block has been an endearing creativity of man. As a result of this, it has been possible to create door/gates that are well secured using smart card. Individuals/administrators are increasingly aware of the dangers that result if they rely on keys or padlocks to provide security network to unauthorized rooms or offices. Attackers can forge keys or make master keys that will be used to break into such rooms or offices. To eliminate this insecure condition, there evolved the use of password in doors/gates mechanism.

Security access system is an important aspect of any system. Security access control is the act of ensuring that an authenticated user has access only when they are authorized to and no more. Security access system have been useful in the safety of offices, residences and government houses. Security consciousness is highly needed where our environment and health is concerned.

Single secrets such as pass-word can be effective security controls. A long pass-word of more than ten characters that consists of random letters, numbers and special character can be very difficult to crack. Unfortunately, users cannot always remember the sort of pass-word, partly due to fundamental human limitations. Research by George A. Miller, published in the Psychological Review in1950 concluded that the memory limit of between five and nine random characters, with an average of seven. However, most security guidance recommends at least eight-character random password. Because most users cannot commit eight-character random pass-words to memory, many attempt to write it down on a piece of paper.

EDITOR-IN-CHIEF
Prof. Saeid Eslamian [IRAN]

Users rarely show great discretion when they write down password and so provided opportunities for attackers to have access into their security system. Where there are no restrictions on password complexity, users tend to choose easy to remember passwords such as "1234" or other easily guessed words.

Two-factor authentication i.e. System that uses card and pin code for authentication overcome the issues of single secret authentication by the requirement of a second secret. Two-factor authentication uses a combination of the following items;

- Something that the user has, such as hardware token or a smartcard.
- Something the user knows, such as personal identification number (pin).

Smartcard and their associated pins are increasingly popular, reliable and cost-effective form of two-factor authentication with the right control in place, the user must have the smartcard and know the pin code to gain access to rooms or offices or administrative places. The smartcard requirement significantly reduces the likelihood of unauthorized access to an organization's outfit.

Hence to reduce or eliminate the access of an unauthorized person into rooms/offices/administrative block, an automated door/access path is to be constructed. This project involves controlling the doors/gates by an artificial means (artificial intelligence). It involves the application of automated system that is incorporated into these doors/gates for efficient and optimum performance. Taking the advantage of the microcontroller as one of the fastest processing and intelligent instrument, it was incorporated into the system and interfaced with smartcard in order to achieve accuracy in processing.

Microcontroller (programmable) has series of instruction fed into it; this helps it to accomplish most intelligent task like the human brain. These include detection of card, identification of password, displaying "access granted", "access denied" and opening and closing of door/gate with the aid of the smart card, electromagnetic relay controls the open and close of a sliding door/gate which is moved to and fro by a synchronous motor (DC).

The microcontroller-based security door using smart card is designed using the PIC18F452 microcontroller with appropriate software package. The project is

EDITOR-IN-CHIEF
Prof. Saeid Eslamian [IRAN]

segmented into different module which includes; the mechanical, electrical/electronic and programmable (computerized) part as listed as: The microcontroller module, The keypad module, The power supply module, The display unit (module), The Smart card module, The alarm signal module, The sliding door/gate, Electric motor, Electromagnetic relay etc.

The microcontroller does most of the addressing and instruction execution through its data, address and control boxes, while the keypad is used for selection i.e. as an input device to issue instruction to the control processing unit (CPU) of the processor. The smart card and its associated pin provide the security system while the display module shows the output of events that are taking place. The help of the relay is utilized by the CPU to switch the motor ON which moves or turns causing the gate/door to slide to the defined direction. The power supply unit supplies a voltage for optimum operation of the circuit. The alarm unit produces an alarm signal when a wrong password or pin code is entered more than three times.

Electronics generally has really created a great impact on the lives of people. The part of electronics that is fascinating is the digital electronics which has outgrown its analogue counterpart. The microcontroller developed contributed immensely towards the advanced technology as this can be programed to meet designed specifications. As the technology keeps improving, there is need for human to enjoy the usefulness of these technologies. The Rain detector generally has sensor such that as the internal resistance of the sensor reduces or decreases, the corresponding information is sent to the microcontroller and via a differential operational amplifier.

Man has gone through tremendous change right from the 'early man' that had (relatively) not much to think about, because of the obscurity of knowledge and simple environment. This complication has led to man's quest to conquer his environment and create a more comfortable, enabling environment for himself. Hence, he embarked on many developments in the field of science, most prominently.

LITERATURE REVIEW

This project became a reality as a result of the design work done in comparison with the existing standard. In effect, so many models of "RAIN DETECTOR" have been in existence, but in most cases, details of the design are not readily available. In a 2005 model, the project on rain detector was based on an alarm system in which, as soon as it starts raining, the alarm will give signal to the house owner that it has started raining, for him to lock-up windows.

Eftekhar et al., (2023) designed project entitled "Automatic door opening and closing system using IR Sensor with a simple design. The main motto of this project is to utilization of sensor with of embedded equipment for the door opening systems' we describe the design and implementation of automatic controller for the door' The door opens when any human movement is detected near the door it detects the movement and sends a signal to the transistor, in turns gives interrupt signal and the door and close the door' which is driven by a motor IC, The interrupt signals can be used to stop power to the motor in the event of locked condition. The limitation to this kind of project is that everybody or anybody can have access to the entrance without security checks.

People may have difficulty accessing the entry door to their house because it is difficult for them to turn a key or they cannot maneuver a wheelchair into a position to either open the door or grasp the doorknob **Pik-Yiu Chan and John Enderle, (2015).** The Automatic Door Opener is designed to pneumatically open or close a door by remote control using radio frequency communication technology. A fingerprint recognition system is also installed for security purposes preventing unauthorized users from gaining entry. In **Pik-Yiu Chan and John Enderle, (2015),** this researcher did not consider the inclusion of rain detector into its circuitry to solve same problem.

Saurabh et al., (2022) in their research states that automatic door is locally available in market and it's very expensive. This high price is reduced by some remove of the sensors and unwanted chip or object. The aim of our project is to design, develop and test automatic door opening system. The raw material which is locally available in local market at low cost of price this is recommended that research paper which I read low speed high torque DC motor and the sensor that

EDITOR-IN-CHIEF
Prof. Saeid Eslamian [IRAN]

satisfy our project automatic door opening system requirements, **(Saurabh et al., 2022)**. In **Saurabh et al., (2022)**, this research focuses on the speed of the motor and how easy it is to assess the electronic materials for the construction without looking at the security aspect of the said project.

The average annual rainfall in India is 300-650 millimeters. The impact of which is observed in the industrial sector, agricultural area, and our daily lives. To avoid the last moment chaos of saving everything that could be damaged, the idea of rain sensor is proposed. It's basically a switching device, it senses water and signals the device connected. The basic principle of a rain sensor is complete internal reflection. The main motives are conservation and protection. Any system that gets affected due to rain can be automatically shut down and where the interiors have to be protected it works as a life saver. Other than rainfall it can be used as a water sensor in many places like machines, basement and so on. So, the device detects and adjusts in time. Even the smallest drops of water can complete the circuit and trigger the buzzer and the alarm will go off. It is a battery-powered device which combines a sensor, buzzer, microcontroller, transistors, diode and other components in the circuitry, **(Anushka, 2018)**. In **Anushka, (2018)** the research did not show how rain detector can be used to control the windows of any residence or cars. The paper just generalized its rain sensor applications.

Ashfaq Syed, (2021) shows that Rain alarm project is a simple but very useful project which detects the rain and automatically triggers the alarm or buzzer. The sensor acts like a simple switch where the switch closes when it rains and is normally open when the rain stops. As water is basic need in everyone's life. Saving the water and proper usage is very important. This project will trigger the alarm when it rains so we can make some actions for rain water harvesting and also to save the rain water for using it later for agriculture in fields. It is used in automobiles when the detector detects the rain it will automatically activates the windshield wipers of the vehicles. It can also be used in household for harvesting the rain water and increasing ground water storage instead of flowing it into drainage. In **Ashfaq Syed, (2021)**, its limitation is that those leaving in the house where such a system is installed can only be alarmed about the rain. There was no consideration for the automatic closure of the windows.

The NSF in 1988 started to provide a mechanism whereby student engineers at universities throughout the United States designed and constructed devices for persons with disabilities **(Enderle et al., 1999)**. **Enderle et al., (1999)**. In their research shows that the program combined the academic requirement of a design experience with enhanced educational opportunities for students, and improved the quality of life for disabled individuals. Students and university faculty provided, through their normal ABET accredited senior design class, engineering time to design and build the device or software, and the NSF provided funds, competitively awarded to universities, for supplies, equipment and fabrication costs for the design projects. Described in this report are first year experiences at UConn with this NSF program including lecture topics, site visits to clients and project selection, required reports and the WWW, course structure and organization **(Enderle et al., 1999)**.

Garvin, (1997), in his research work, provides some details of a research project carried out over three years to assess the potential for automatic doors and windows to improve home living for elderly and disabled people. The main output of the research was a guide for use by specifiers, manufacturers and users of automatic doors and windows. The guide was published after completing a series of tests on automatic control. **Garvin, (1998)** has described research carried out to assess the potential improvements that automatic doors and windows can make to the home living of elderly and disabled people. Such controls have been demonstrated through laboratory tests to be of benefit in improving access and facilities. However, the laboratory tests also demonstrated the need for automatic control systems to meet the needs of the individual users. Failure to address this aspect could result in poor specifications and the installation of controls that provide as much as a barrier as poor manual hardware. Automatic doors and windows are not needed by all disabled people. The blind volunteers were generally able to open and close windows and could not see a need for them. However, there may be a role for good manual hardware for some users which includes better colour contrast and easier use. The research has also included the installation of automatic controls into controlled field situations.

Yelda and Taşkın, (2018) in their study, designed a garage door system which enables the car garage door to be opened and closed automatically according to the numbers of the identified car plates using the external hardware and software development environment via the Arduino platform, has been developed. In addition, while the garage door is moving down in case any entity approaches the door too close, the control of the door motor has been also considered as to provide the security through the sensor, remote controller and desktop software. The work was designed specifically for the use of servo-motors scanning the angles of 360 degree also contributes to the next execution to be developed in order to create a safer system using face recognition technology.

Delebe, (2016) designed a microcontroller based smart grid. In other words, the microcontrollers were heavily used in embedded applications. As well as mobile phone, tablet and laptop, everybody has almost an intelligent device such under their hands, and they are basically created from hardware components like processor, ram/rom/flash memory/display/input-output ports. In their system, an operating system that controls the hardware added in order that the electronic card can work. The microcontrollers have the necessary structure so that it simply prepares and control this operating system.

Teikari, (2012), presented an inexpensive but effective visual stimulator based on light emitting diodes (LEDs) and open-source Arduino microcontroller prototyping platform. The main design goal of our system was to use off-the- shelf and open-source components as much as possible, and to reduce design complexity allowing use of the system to end-users without advanced electronics skills. The main core of the system is a USB- connected Arduino microcontroller platform designed initially with a specific emphasis on the ease-of- use creating interactive physical computing environments. The pulse-width modulation (PWM) signal of Arduino was used to drive LEDs allowing linear light intensity control. The visual stimulator was demonstrated in applications such as murine pupillometry, rodent models for cognitive research, and heterochromatic flicker photometry in human psychophysics. These examples illustrate some of the possible applications that can be easily implemented and that are advantageous for students, educational purposes and universities with limited resources. The LED stimulator system was

developed as an open- source project. Software interface was developed using Python with simplified examples provided for Matlab and LabVIEW.

This project is designed in order to create a better garage door that is able to function autonomously by including several different components including sensors, actuators and microcontrollers. We have created a fully function garage door that is able to be controlled through analog touch sensors and a mobile application. This provides more control of such a mechanical machine, and with the addition of a proximity sensors, we managed to make even more secure and able to execute commands that will stop it from closing when someone is in the way.

Technological advances in recent years have resulted in the development of the programmable logic controller (PLC) and a consequential revolution of control engineering **(Bolton, 2015). Bolton, (2015**) introduction to PLCs, aims to ease the tasks of practicing engineers coming into contact with PLCs for the first time. It also provides a basic course for students in curricula such as the English technicians' courses for Nationals and Higher Nationals in Engineering, giving full syllabus coverage of the National and Higher National in Engineering units, company training programs, and serving as an introduction for first-year undergraduate courses in engineering. The book addresses the problem of various programmable control manufacturers using different nomenclature and program forms by describing the principals involved and illustrating them with examples from a range of manufacturers.

Hema, (2016) in his research, presents experimental setup up of creating wireless sensor network using Arduino and Xbee module. His research served as a model for almost all sensor network that one would like to build. This is to create setup which will allow to read temperature value form inexpensive temperature sensor placed apart at various location that are mesh networked to gather a stream of input and send to base station.

MATERIALS AND METHODS

This section covers extensively the principles of operation, major components that are used in the circuit design of the project including an indebt analysis of the

EDITOR-IN-CHIEF
Prof. Saeid Eslamian [IRAN]

various module, functions of the part that constitute module and functions of the part that constitute the design. Design calculations and hardware design are all thoroughly treated.

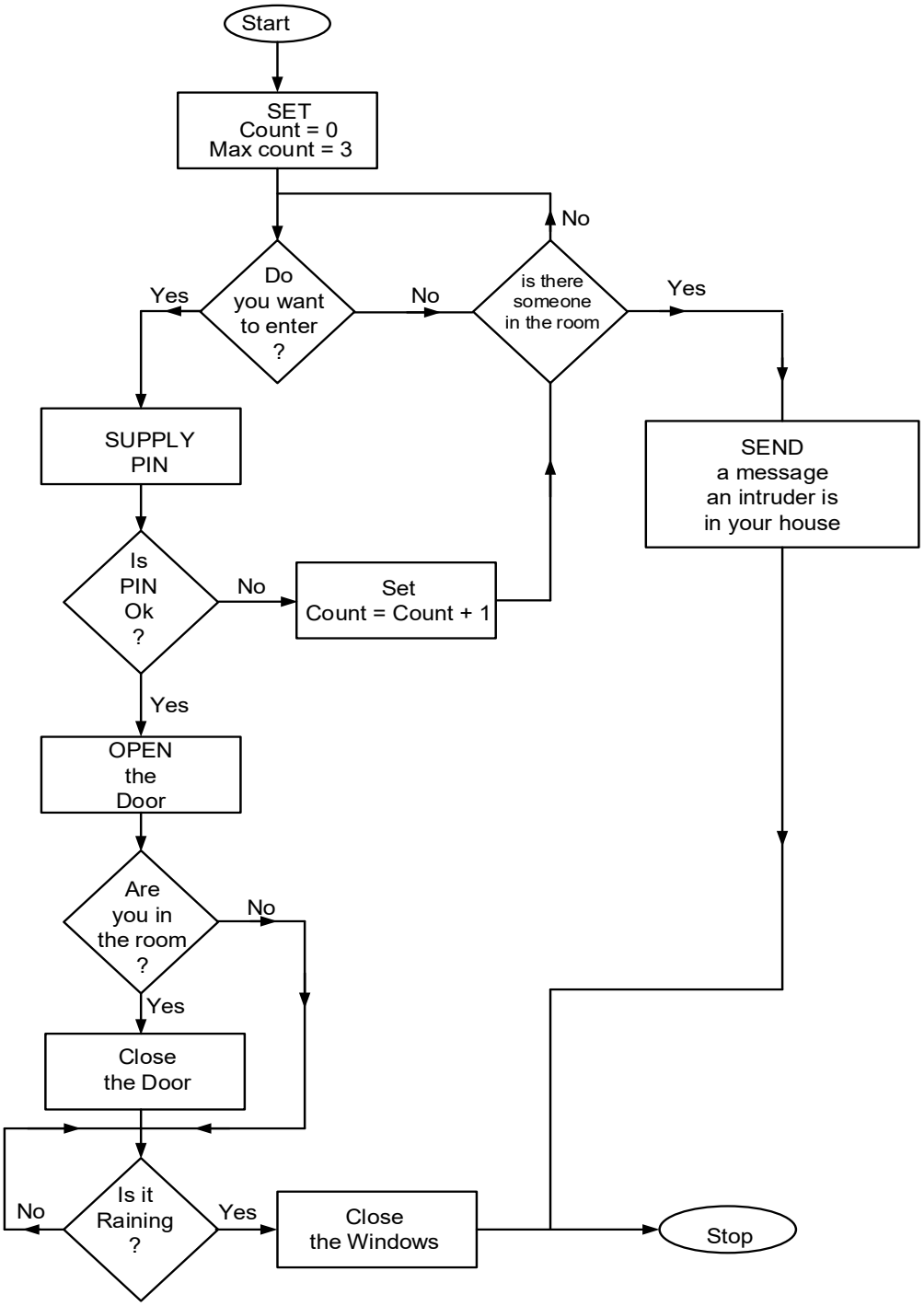

Figure 1 Flow chart of the system

EDITOR-IN-CHIEF
Prof. Saeid Eslamian [IRAN]

The fig. 1 shows the flow chart of the system. The flow of the executed instructions is as shown with the arrows. If the logic is Yes, the commands are executed and when the logic is No, the command is terminated and end the program.

AUTOMATIC RAIN DETECTOR OPERATION

Automatic rain detector is a well secured window that automatically closes itself when rain starts to fall and opens automatically when it stops raining.

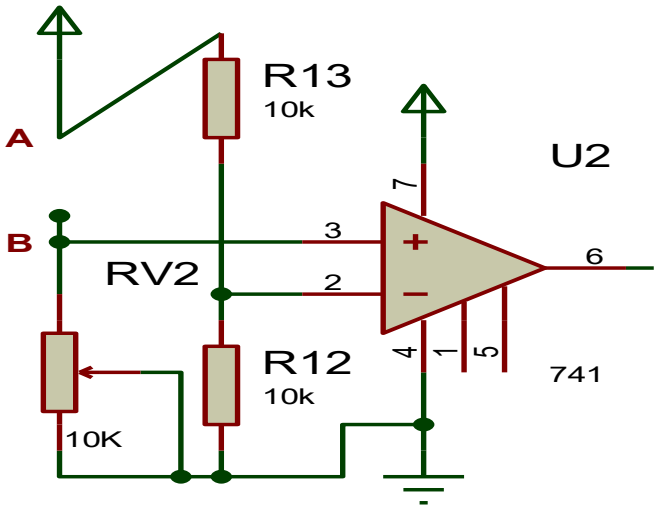

Figure 2: A comparator section of the rain detector circuit

The resistor R7, connected between output and pia 5 (the non-inverting input) provides positive feedback to speed up output switching as follows. Suppose the V_{in} on pin 4 is rising towards the reference voltage V_{ref} on pin 5 and the output on pin 2 is high. Once V_{in} is slightly higher than V_{ref} the output will start fall towards 0V. A proportion of this fall in voltage is fed via R_7 to pin 5 and so begins to reduce V_{ref} increasing the difference between V_{ref} and V_{in}. This causes the fall in the output voltage accelerations, causing a very rapid fall to zero volts. A similar action occurs when a high voltage on pin 4 falls to a lower value than pin 5, ensuring very fast output switching. There is however, another action taking place; it was mentioned in the previous earlier that a fall in the output voltage is fed back via R_7 and causes fall in V_{ref} and likewise a rising output voltage will cause a rise in V_{ref}, changing the reference point V_{ref} depending on whether the output voltage is high or low. The difference between the high and low values of V_{ref} is called the hysteresis of the circuit, and is an important property of the Schmitt Trigger.

The two bar wires at point A and B which is terminated at Vin and ground with a bar wire in the diagram above serves as the rain sensor and forms a voltage divider

with R_8 to give V_{in}. It is normally at the roof of the building. Initially, the sensor is at a very high resistance. Hence $V_{in}>>V_{ref}$.

$$V_{ref} = \frac{R_{12} \times V_{CC}}{R_{13} + R_{12}} \qquad 1$$

But the above circuit can only be at LOW output if $V_{in}<V_{ref}$. If at initial stage we assumed that it is not raining, then the terminal resistances an A&B which is the rain sensor will be at a very high resistance. Since $V_{in}>V_{ref}$, the circuit output will be HIGH i.e. logic 1 which reverse biases the transistor and this triggers the dc motor to open the window. Hence the window remains open. However, before choosing the variable resistor at terminal B&A which is serves as the rain sensor, an experiment was conducted using different types of water whose resistance values were measured.

If it starts raining, by this condition or assumption, the resistance at terminal A and B will start decreasing as soon as the rain touches the sensor circuit is closed. Now since V_{in} is less than V_{ref}, i.e. $V_{in}<V_{ref}$, the comparator will send a logic 0 signal the microcontroller to forward bias the transistor which then triggers the motor.

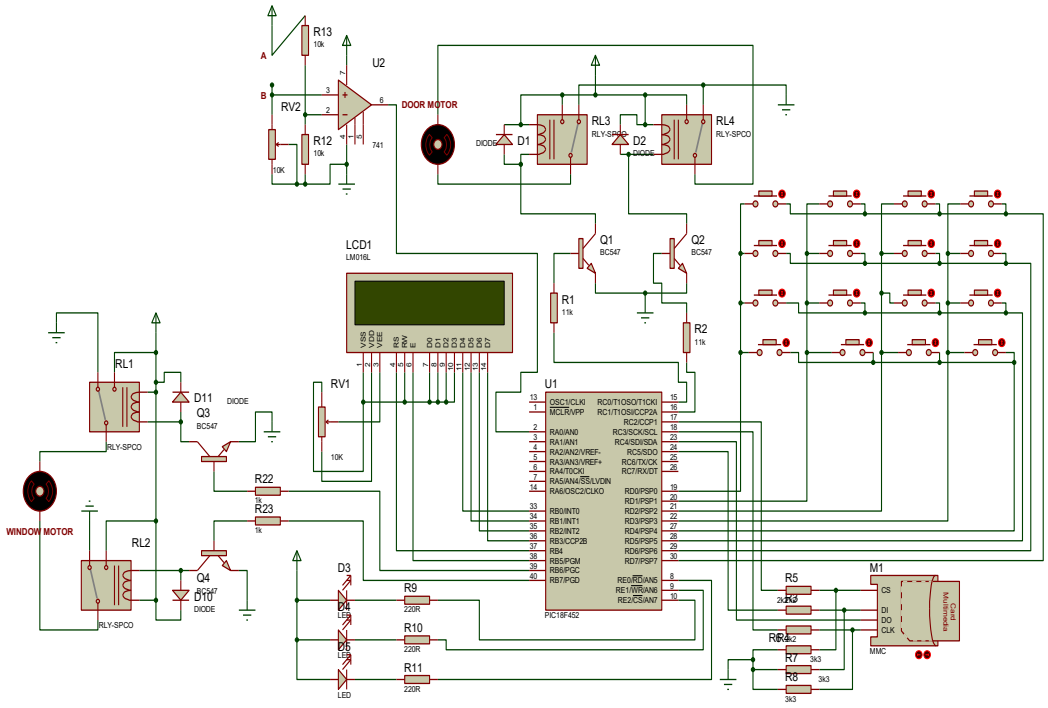

Figure 3 Complete circuit diagram for rain detector and door access

EDITOR-IN-CHIEF
Prof. Saeid Eslamian [IRAN]

Generally, when the input voltage V_{in} is less than half the reference voltage V_{ref} output voltage of the comparator will be low, the output of the OP-AMP (LM399) being in logic "0", will send a signal to the microcontroller to forward bias the Transistor Q_4 and Q_3 into operation which then triggers the dc motor to drive the window. Hence the window will automatically via the transistors RB6&RB7 of the microcontroller to CLOSE. Also, when the input voltage V_{in} is more than half reference voltage V_{ref}, due to an increase in resistance, the output of the OP-AMP (LM339) which is connected to the RA0 of the microcontroller will be at logic 1. Therefore, as mentioned above, the logic '1' at RA0 of the microcontroller tells the microcontroller to reverse bias the Transistor which then triggers the electric motor connected to it and the window automatically OPEN. This operation is as shown in the diagram of the fig 3 above.

MEMORY CARD DOOR OPERATION

When the smart card is inserted into the smart card slots, the liquid crystal display (LCD) displays a five-digit figure where the user will input his four security codes. Once the four-digit code corresponds with identity of the user stored in the card memory, a Logic '1' is sent to the microcontroller to forward bias the transistor at port 15 Bit i.e. RCO. Sending logic "1" to the transistor Q_1 which triggers the electric motor attached to the door via the NPN transistor to OPEN or allow access to the user.

After access is allowed, a logic '0' will automatically be sent to the microcontroller to reverse bias the transistor at port 16 Bit RC1. Sending a logic "0" to the transistor Q_2 which in turn will triggers it so as to CLOSE it. The last digit of the five digit is use for entry purposes. So, the microcontroller will send a "0" or "1" to the two transistors which is acting as a switch to drive the electric motor attached to the door to allow access to the person.

The configuration action of the door transistor through the microcontroller is as shown below.

0 1 trigger transistor 01
1 0 trigger transistor Q2
0 0 No action
1 1 No action

EDITOR-IN-CHIEF
Prof. Saeid Eslamian [IRAN]

It should be noted that the same configuration for the digital binary signal codes were used for both smart card and automatic rain detector.
When a '1' is sent to the transistor Q_1, a '0' is sent to the transistor Q_2, and when a "1" is sent to Q_2 a '0' is sent to Q_1 respectively. When the transistor Q_1 is triggered, the door is OPEN, and when Q_2 is triggered, the door is CLOSE

HARDWARE DESIGN

The implementation of the design of security door using smart card is based on hardware and software. The hardware comprises of modules that are segmented on the Vero board as well as physical wiring. The hardware ensures optimum performance of the whole circuitry. The hardware design of the project consists of six essential modules which include keypad select module, sliding gate module and display module and power supply unit module.

Keypad

Fig. 4 shows keyboard select module as an input. It is used to issue instructions (entering of PIN) to the microcontroller while the display unit displays either "enter PIN, access denied, or access granted".
It shows the PIN as it is being entered.
The keys are organized as follows:
0 1 2 3
4 5 6 7
8 9 10 11
12 13 14 15

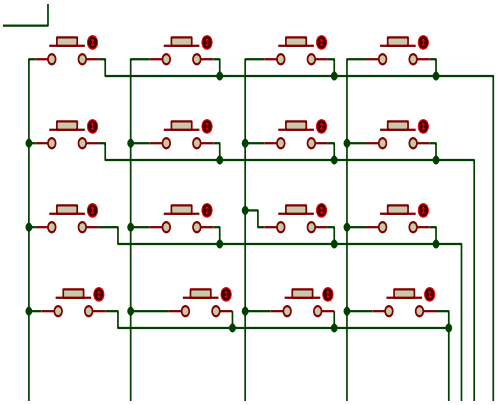

Figure 4 shows the schematic diagram of keypad

EDITOR-IN-CHIEF
Prof. Saeid Eslamian [IRAN]

The keys are labeled as follows:

1 2 3 4

5 6 7 8

* 9 0 #

The sliding gate unit open and closes for human passage after being triggered by relays while the power supply unit provide the appropriate dc voltage needed for the circuit operation. The smart card unit detects a card if it is configured to the system. If the card is configured to the system, it sends a signal to the microcontroller which now display "enter pin". The microcontroller is the heart of the entire circuiting. It gives instruction to the different modules. There is also the alarm signal which issues a signal in form of a sound when a wrong pin is entered in the system more than three times. The keypad is an input device designed to issue instruction in the microcontroller. It consists of increment, decrement, adjust, enter and reset buttons. Each key upon being depressed transmit its instruction to the central processing unit of the microcontroller. The keypad is found at the output port of the microcontroller. In this project, the interface is at port 19, 20,21,22,27, to 30 i.e. bit RDO to RD7 and Pin 9 as the reset Each of the button are tied with a putt-up resistor (1k), grounded through the 1k resistor, and the other side is connected to V_{CC} as shown in fig. 5

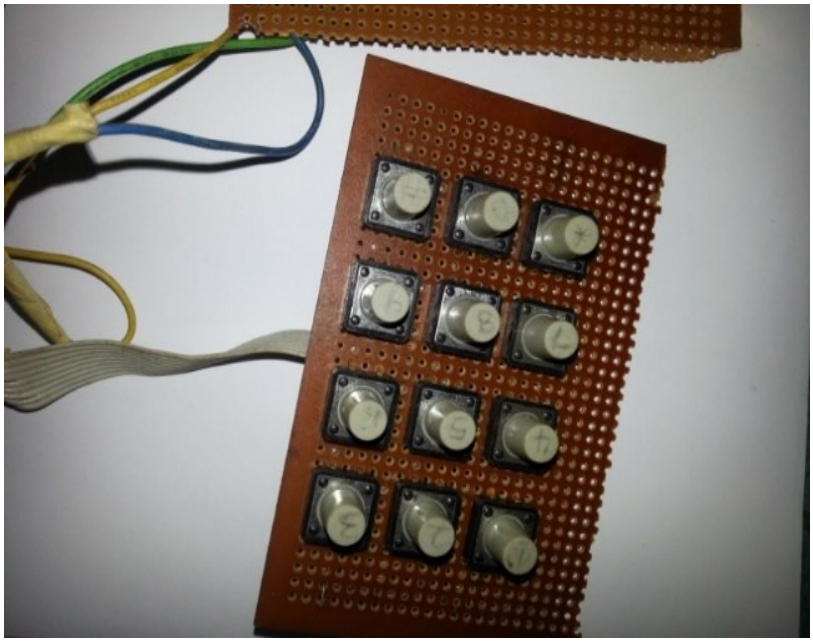

Figure 5 The keypad is connected as a normally low switch.

EDITOR-IN-CHIEF
Prof. Saeid Eslamian [IRAN]

Sliding Door Unit

This unit consists of a dc motor and series of mechanism that drives the gate to open/close position. This occurs after the correct card and pin is detected. The process takes place after signal's receptions from the microcontroller through which the relay triggers the door from a pulsating dc voltage. 5v dc input supply for relay switch is used. The transistors operates when there is movement instruction (that is an active high pulse) from the microcontroller after a card and is associate pin is detected. A pull up is tied to V_{CC} at the base of the power transistor for optimum switching. The process energizes the relay (normally closed) and allows a maximum current flow from the collector to the emitter of the transistor. Placing an active low pulse at this port terminates the current. The transistor is chosen to handle high current of 10mA which is IC max current and inductive effect of the dc motor. The second transistor is found at port 40 for window or 16 for Door bit i.e. RB7&RC1 see circuit diagram. This operates at cut off region; the port is enabled when active low pulse is place at the base of the transistor with a pull-up resistor inclusively. The relay contacts are de-energize (when normally open) which allows current to be discharged from the inductor of the relay to conduct emitter transistor. In order to avoid the stored current from damaging the transistor, a diode is connected to act as feedback.

Display Unit

Depending on how many lines are used for connecting an LCD to the microcontroller, there are 8-bit and 4-bit LCD modes. The appropriate mode is selected at the beginning of the operation in the process called 'initialization'. The 8-bit LCD mode uses outputs DO-D7 to transfer data as explained on the previous page.

The main purpose of the 4-bit LCD mode is to save valuable I/O pins of the microcontroller. Only 4 higher bits (D4-D7) are used for communication, while others may be left unconnected. Each piece of data is sent to the LCD in two steps-four higher bits are sent first (normally through the lines D4-D7 see fig. 6) then four lower bits. Initialization enables LCD to link and interpret received bits correctly.

EDITOR-IN-CHIEF
Prof. Saeid Eslamian [IRAN]

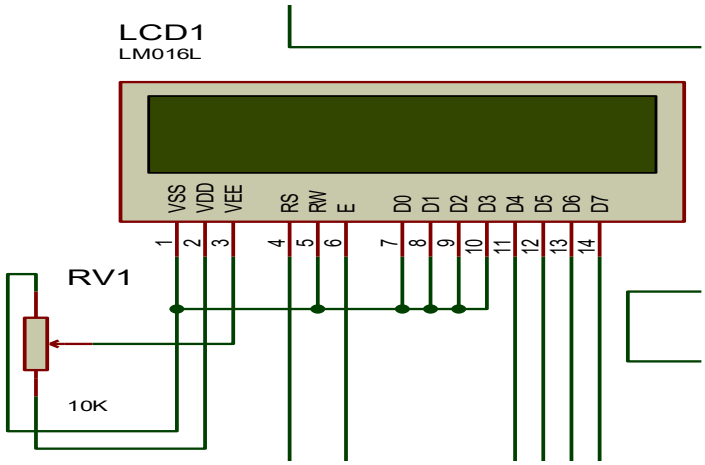

Figure 6 The schematic diagram of display unit

PIC18F452 MICROCONTROLLER

One of the most important features of the microcontroller is a number of in pins used for connection with peripherals. In this case, there are in total of thirty-five general purpose I/O pins available, which is quite enough for the most applications.

In order pins' operation can match internal 8-bit organization, all of them are, similar to registers, grouped into five so called ports denoted by A, B, C, D and E. They all have several features in common:

- For practical reasons, many I/O pins have two or three functions. If a pin is used as any other function, it may not be used as a general-purpose input/output pin; and
- Every port has its "satellite", i.e. the corresponding TRIS register: TRISA, TRISB TRISC etc. which determines performance, but not the contents of the port bits.

By clearing some bit of the TRIS register (bit-0), the corresponding port pin is configured as output. Similarly, by setting some bit of the TRIS register (bit=1), the corresponding port pin is configured as input. This rule is easy to remember 0=Output, 1=Input

In the PIC18 series of microcontrollers, serial communication can be handled either in hardware or in software. The hardware option is easy. PIC18 microcontrollers have built-in USART (universal synchronous asynchronous receiver transmitter)

circuits providing special input-output pins for serial communication. For serial communication all the data transmission is handled by the USART, but the USART has to be configured before receiving and transmitting data. With the software option, all the serial bit timing is handled in software, and any input-output pin can be programmed and used for serial communication. In this project a window motor is connected to a transistor which terminate at an Op-Amp connected to the microcontroller. These devices come in 28-pin and 40/44-pin packages. The 28-po devices do not have parallel Slave Port (PSP) implemented and the number of Analog-to-digital (A/D) converter input channels is reduced to 5.

SOFTWARE DEVELOPING

This involves a series of steps or set of activities which are necessary. For development of reliable and maintainable software. It is of great importance that hardware design cannot be used in microcontroller-based system without dependable software. A typical microcontroller development system includes visual display unit (VDU), keyboard, Random Access Memory (Ram) which serves as stone for the program and prom programmer. Software system is a term used to describe program which was provided by the manufacturer to aid the development of user (application) programs. These includes program which convert C-language into machine codes or high language into machine code (compiler). It also includes programs which facilitate program modification (editor). The computer aided development methodology which is essential for software development, as was used on this project are:

Text Editor

After keying in the program codes using the input device, the text editor is used to correct errors in the program. In a nutshell, i.e. it is used to edit the program after it has been written

Translator

There are two types of translators, they are assembly and compiler. An assembly translator translates C-language in form of mnemonic (memory aids) into machine code. A good feature of assembler is creating a list that shows the machine code and C-language of a program side by side. A compiler on the other band translates a high-level language into machine code.

EDITOR-IN-CHIEF
Prof. Saeid Eslamian [IRAN]

Link/Locator

The different modules must be joined together in the correct sequence and must be bound to addresses. The link/locator pair work together to coordinate between the separate modulus for smooth program execution.

Development Process

In writing the software for this project, a modular approach was employed. This made it easier to check for error and debug the program. Three major tools were used in the development process; C-language was used to translate from the source code into the object code. The choice C-language was chosen because it makes a program small and enhances faster execution.

Discussion and Results

In this section, various processes in which this project went through was discuss and the results presented as explained later in this section

Material Selection

The materials used for the various components of the design are discrete components such as resistors, diodes, capacitors, bridge rectifier, voltage regulators, microcontroller, transistors, LED. led LCDs, electromechanical component such as electric motor, relay and mechanical components such as aluminum bolts and nuts, glass where all chosen for this project.

Assembly Process

The design work is made up with software and hardware. The software program of this design is written with C-language program while the hardware comprised of the control unit, the input unit, the power supply unit and the display unit. Input unit have card slot where cards are inserted for access purpose and it is connected to the control unit through port zero (RC) of microcontroller. The sensor unit (keypad) is made of micro switches, which transmits information of the control unit through port two (RC) of the microcontroller especially when each of them is pressed. The display unit are made with arranged serially to each other and are connected to the control unit through port one (RB). The control unit is made up

EDITOR-IN-CHIEF
Prof. Saeid Eslamian [IRAN]

of microcontroller. It is the heart of the device as it accepts from the sensor unit (keypad) and the input unit through port one (RB) to the display unit.

Tests

Prior to soldering to the Veroboard, each of the subunits were built and tested on the multi-channel digital test board. This is a composition equipment having an in-built power supply, high and low frequency astable multivibrator, a monostable multivibrator, a 16-channel logic probe and bread board for all form of digital reproduction.

With the use of these devices, each stage of the Rain Detector project was tested and certified okay before the they were transferred/soldered to the permanent board. First of all, the power supply unit which is the major part of the project and upon which reliability of the project depends on, was put in place in a perfect working condition to ensure adequate supply of all power demands of the whole system. Next, the component layout of all the ICs and other discrete components were all in place. For the ICs used, none was soldered directly to the to the Vero-board due to the adverse effects of over hearting such sensitive devices. Rather, their respective IC sockets were soldered at their respective positions on the board. Finaly, after constructing and packaging the whole system, water was brought in contact with the bar wires (rain sensor) and the window opened automatically which is how the system supposed to function.

Several tests were carried out on the Automatic DOOR using memory card circuit to confirm the level of its performance and efficiency. In the power unit, test was conducted using the digital multimeter to read the output voltage of the power supply. We confirmed that the terminal output read the appropriate voltage. From the sensor unit, confirmation was made that the micro switches used could deliver right information when the button is pressed. From the control unit, serious testing was conducted to ensure that output is given in accordance to the input. This testing is the most important of the device because of its link to other units in the device. This process of testing was done using multimeter and logic probe to ensure that no mistake was made in data transfer. After all these testing, the observation was that the design work was successful in respect of software development and hardware assembly.

EDITOR-IN-CHIEF
Prof. Saeid Eslamian [IRAN]

Results

For the rain detector circuit, as mentioned earlier, many errors were found during debugging the assembly language program, but the general result was that when water touches the water sensor, the window automatically closed itself, and when water stop making contact with the sensor, the circuit assures that water has stopped falling and the window is force to open automatically. Again, the circuit ensures that the user can operate the rain detector circuit with a switch provided. Another result is that the project detects water more (i.e. sensor water) more than the prototype available because of the fast responds of the used micro controller than signifying another breakthrough in the area of jobs simplification as regards in automatic rain detector system.

Also, the door responded to the circuit trigger when the right password was entered into the card reader.

FINDINGS

This research work was very interesting and has broadened our knowledge mostly at the field of C-language programming and hardware design. Though this work was successful, many unexpected problems were encountered during the design process. Some components were expensive and difficult to get, while some not readily available in the market like suitable compactable 12v dc motor. Practical experience was not much before embarking on the project, but this led us to make depth research using so many search engines to find means towards proving smartcard for the design. We also consulted some material textbooks from the school library and from reference sections. We tried to seek advice from experts in the field of designing and programming to enable us carry out the project successfully.

CONCLUSION

he main purpose and objective of the project has been achieved, since the memory card and the rain sensor were able to transmit information to the control unit, the controller accepts the information transferred and process them by prompting for password (Enter pass-ward) when the code has been entered through the input with the help of keypad, the controller is found to be able to interpret the information and process it again without troubles. It however displays "ACCESS

EDITOR-IN-CHIEF
Prof. Saeid Eslamian [IRAN]

GRANTED" or "ACCESS DENIED" depending on the information it has been fed with. This project has also satisfied the objectives by becoming interactive since it can ask question to insert card. After the card insertion, another question goes requesting for the users pass-word. It confirms the password and decides if the door/gate will be opened or remain closed. It is human friendly and can be used by any person who is authorized. This project was proved beyond reasonable doubt that with programming imaginations can be made real.

RECOMMENDATION

The successfully constructed automatic rain detector and automatic door opener using memory card, can be improve such that the standard of the designed for bigger doors can be done using a big electric motor. Also, this design can be applicable to modern car doors such that as soon as it starts raining, the windscreen wiper and the doors glass motor can be triggered into operations via the rain sensors.

ACKNOWLEDGEMENT

The authors would like to thank everyone, just everyone!

REFERENCE

Eftekhar N. A, Mehedi Hasan, Saiful I.R, Sahenshah, Parvej and Hafsa akter, (2022). Automatic Door Opening Closing System Using IR Sensor, Publisher: researchgate.net DOI: 10.13140/RG.2.2.21931.00802

John E. D and Pik-Yiu Chan, (2015). Automatic Door Opener, conference paper, DOI: 10.1109/NEBC.2000.842418

Surabh A. W, Suraj I. S, Gitesh S. K, Shubham P. H and Pravin D. P, (2022). Automatic Door Opening System, International Research Journal of Engineering and Technology (IRJET), Vol. 9. https://www.irjet.net/archives/V9/i5/IRJET-V9I5155.pdf

Ashfaq Syed, (2021). Smart Rain Detector Using Arduino, http://dx.doi.org/10.2139/ssrn.3918326

Anushka Kumar, Sambhav Jain, Komal Meena, and Debirupa Hore, (2018). Design of Rain Sensor Alarm System, International Conference on Smart Systems.

Enderle, J.D., Pruehsner, W., Hallowell, M.B., (1999). First Year Experience at the University of Connecticut with NSF Design Projects to Aid Persons with Disabilities. Biomedical Sciences Instrumentation, Vol.35, ppg.253-258.

Garvin S L, (1997). Automatic door and window controls for the disabled, Building Services Journal, pp39-40, https://www.dinf.ne.jp/doc/english/Us_Eu/conf/tide98/91/garvin_

EDITOR-IN-CHIEF
Prof. Saeid Eslamian [IRAN]

Garvin S L, (1998). Domestic automatic door and window controls for use by elderly and disabled people, BRE Report BR334, Construction Research Communications, 1997. https://www.dinf.ne.jp/doc/english/Us_Eu/conf/tide98/91/garvin_stephen.html

Yelda. F and Taşkın. U, (2018). Automatic Garage Door System with Arduino for defined license plates of cars, Conference paper, DOI: 10.1109/IDAP.2018.8620835

Delebe. E, (2016). Projelerle ARDUINO, 9 rd ed.,KODLAB, pp. 1

Teikari. P,Najjar. R, Malkki. H, Knoblauch. K, Dumortier. D, Gronfier. C, and Cooper. H, (2012). "An inexpensive Arduino-based LED stimulator system for vision research", Journal of Neuroscience Methods, vol. 211, no. 2, pp. 227-236. http://dx.doi.org/10.1016/j.jneumeth.2012.09.012

Joel Mukaratirwa, Khaldoun Fayad, Irene Ortea and Jaime Campomanes, (2011). Smart Garage Goor – Electronics, Aduino cookbook, https://www.google.com/url?sa=t&source=web&rct=j&opi=89978449&url

Bolton. W, (2015). Programmable Logic Controllers, Sixth Edition, Published by Elsevier Newness, pp.3-6. https://studylib.net/doc/25780703/william-bolton---programmable-logic-controllers--sixth-ed

Hema K, (2016). Wireless sensor network using Xbee on Arduino Platform: *Conference Paper on an experimental study*, DOI: 10.1109/ICCUBEA.2016.7860081

EDITOR-IN-CHIEF
Prof. Saeid Eslamian [IRAN]