E-ISSN: 111 – 2716 P-ISSN: 3026 – 8214
MPRI-JAAER | INTERNATIONAL JOURNAL OF APPLIED & ADVANCED ENGINEERING RES.
VOL. 10 NO. 5 OCTOBER, 2025

DESIGN AND IMPLEMENTATION OF 100A SMART DISTRIBUTION BOARD FOR DOMESTIC ENERGY MANAGEMENT

A. E. AIROBOMAN; G. J. ZIRA; & M. ASIH
Department of Electrical/Electronic Engineering, Faculty of Engineering, Nigerian Defence Academy, Kaduna, Nigeria
Corresponding Author: airobomanabel@nda.edu.ng
DOI: https://doi.org/10.70382/mejaaer.v10i5.045

Abstract

In the world today the distribution of electricity has evolved to the point where electricity is been delivered through smart grid network, in other to harness the full power and efficiently too, smart equipment is required, the 100A smart distribution board is one of this equipment. The aim of this work is to develop a smart, modern, and intelligent distribution board with high efficiency capable of handling current up to 100A, the advance circuit protection mechanism ensures safety to the end users and the electrical system, the system reduces down-time and improves reliability by using real-time fault and notification systems and also by the incorporation of internet of things (IOT) the use of mobile application or web interface can be used for remote control and monitoring of the distribution board is achieved. With the use of cutting-edge components, state of the art materials and advanced control the resulting smart distribution board has achieved a much more efficient, user friendly and safer electrical power distribution to end users. This work presents a step forward in modernizing electrical power distribution systems.

Keywords:
Distribution Board, Smart Network, Internet of Things, Real-Time Fault Detection Web Interface.

EDITOR-IN-CHIEF
Prof. Saeid Eslamian [IRAN]

Introduction

The evolution of electrical distribution systems has transitioned from conventional manual setups to advanced, intelligent networks. Conventional distribution boards, while dependable for basic power delivery, offer limited functionality. They lack real-time monitoring, automated protection, and dynamic load management capabilities increasingly necessary in modern energy environments (Al- amun et al., 2020). These shortcomings lead to inefficient power utilization, elevated operational risks, and compromised safety, especially in residential and small-scale industrial installations (Omokere et al., 2023).

With the global shift toward smart grid infrastructure, intelligent distribution solutions have become imperative. Such systems must support continuous monitoring, automation, and remote control to meet contemporary energy demands (Fujimoto et al., 2020). Smart distribution boards serve as a critical interface between power supply networks and end-users by integrating sensing, communication, and control technologies. These enhancements improve operational safety, energy efficiency, and user awareness of consumption patterns (Almas'ud et al., 2025).

This research presents the design and implementation of a 100A smart distribution board that overcomes the limitations of traditional systems through advanced protection mechanisms, intelligent load management, and IoT-enabled communication. The system enables real-time measurement of current, voltage, and power parameters, with data accessible via mobile or web applications. Remote control functionality, combined with automated fault detection and alerting, reduces downtime and enhances the reliability of domestic power distribution.

The primary objective is to develop a 100A smart distribution board that ensures precise load monitoring, efficient energy utilization, and automated safety responses for residential, commercial, and industrial applications.

This study aims to design a 100A smart distribution board equipped with real-time monitoring and data communication capabilities for remote supervision of electrical performance. It involves developing an intelligent load management system to optimize power distribution and reduce the risk of overload. The study also seeks to identify the limitations of conventional distribution boards in monitoring, fault detection, and control functions. Furthermore, it focuses on integrating automation and remote-control features through IoT-based platforms and implementing protective mechanisms against electrical faults, short circuits, and voltage fluctuations. Finally, the study will conduct performance testing and validation to ensure compliance with electrical safety standards

EDITOR-IN-CHIEF
Prof. Saeid Eslamian [IRAN]

and to evaluate the cost-effectiveness of the system compared to traditional distribution methods.

This work contributes to the advancement of domestic energy management by introducing a secure, adaptive, and data-integrated distribution solution. The 100A smart distribution board exemplifies a practical advancement toward intelligent, real-time power management within the broader framework of smart grid development (Fujimoto et al., 2020).

LITERATURE REVIEW

This chapter entails the historical information on system automation, a review of system components and a review of related works on the topic. An automation system consists of controllable equipment or system connected through a common interfacing medium called a central hub or "gateway". The medium which is a wireless one is based on radio technology as transmitter and receiver user interface. Home, industrial automation systems are being developed by many innovators and have the potential for economic power saving, saving in equipment life span and many more. The proposed DPB architecture includes circuit breakers (CBs), solid-state relays (SSRs), a junction box, voltage, digital energy meter, current sensors, DC power supply, and a microcontroller equipped with a Wi- Fi module as shown in figure 1.

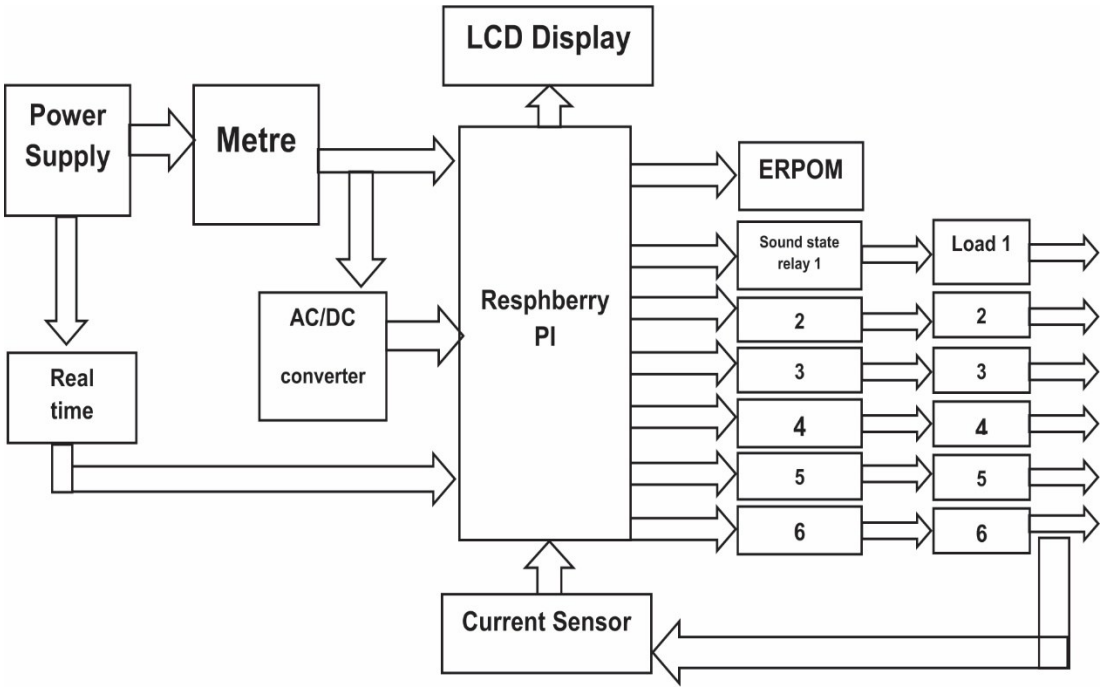

Figure 1: Block diagram of design of a 100A smart distribution board.

EDITOR-IN-CHIEF
Prof. Saeid Eslamian [IRAN]

To measure the power and the energy consumption, the voltage and current signals are collected by the attached end-node sensors. The microcontroller offers an edge-computing of several electrical quantities such as values of the line voltage and current in root mean square (RMS) values. The collected measurements and calculated data are sent to the IoT platform via a gateway or access point using the Wi-Fi communication link and the IoT protocols (Babiuch, and Postulka, 2020). Furthermore, in addition to the interactive display of the transmitted data, the used IoT platform offers cloud computing ability to analyze the received data and facilities taking the required actions.

Figure 2 displays the implemented DPB prototype that incorporates many components such as conventional circuit breakers, sensors, solid-state relays, a power supply, and a microcontroller placed on a control printed circuit board (PCB). The following sub-sections explore the description of each component in the system. Additionally, figure 3 displays the prototype implementation of proposed Smart power distribution board.

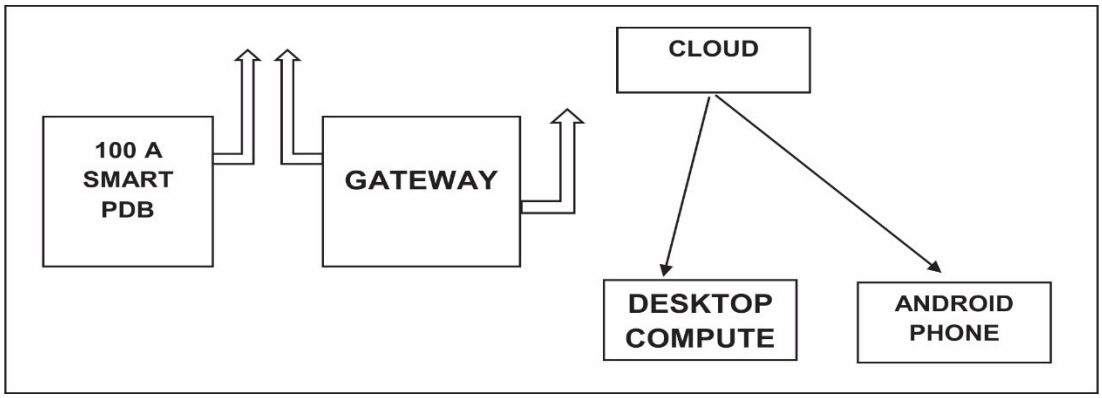

Figure 2: Proposed Architecture of the Smart DPB

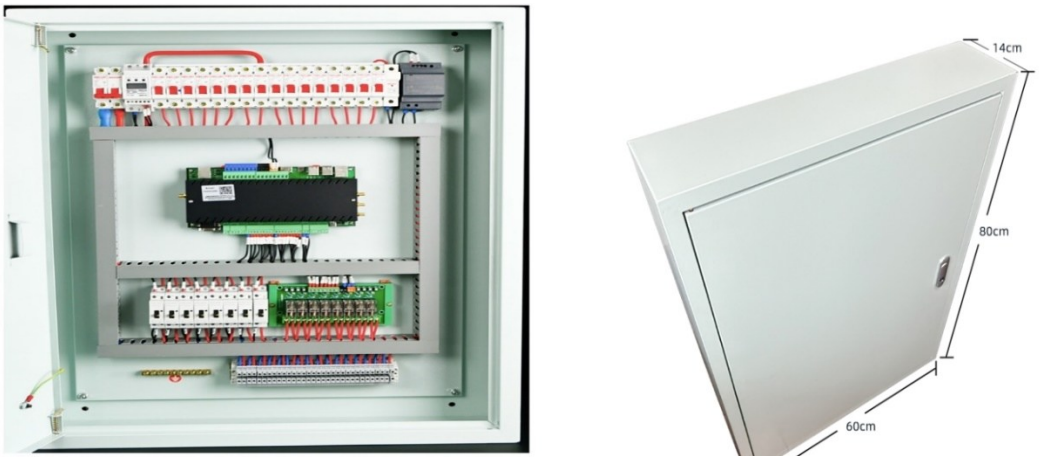

Figure 3 Prototype Implementation of Proposed DPB

EDITOR-IN-CHIEF
Prof. Saeid Eslamian [IRAN]

Power Components Review

Components that makeup the system Automation are similar from research findings and are basically made up of a IOT, signal processing unit, a switching unit and power supply for the working electronics.

Circuit Breakers

Industrial DPBs are necessarily including circuit breakers that work automatically to safeguard an electrical circuit from damage caused by excessive current. After an over-current problem is sensed, the breaker's primary task is to interrupt the current flow. Main circuit breakers are commonly comprised of or followed by a residual current device (RCD), which is a device that is designed for human safety, and it may frequently save lives from electrical hazards as it reduces or eliminates the chance of harmful electrical shock. The RCD operates by detecting a circuit imbalance and immediately turning off the power before an accident or electrocution may occur. Additionally, to provide further protection of the connected loads, a sub-circuit breaker (sub-CB) with a different current rating is commonly incorporated for each load. The selection of the appropriate sub CB type depends on the type and the rating of the residential loads (Rodrigues etal.,2020). In this DPB implementation, typical 100A miniature circuit breakers (MCB) with 30mA RCD are used in addition to the appropriate sub-circuit breakers with current rating of 32, 25, 20, 15 and 10A.

Voltage Sensor

A single-phase ZMPT101B voltage sensor was used to measure the DPB line-to-neutral AC voltage. The device comprises a mutual inductance module with a series high-precision voltage transformer (ZMPT101B) and a high-precision operational amplifier (op-amp) integrated circuit for the convenient acquisition of AC voltage signals up to 250volts (Dileep, 2020). The onboard op-amp circuit performs additional duties such as precise signal sampling and compensation.

Current Sensor

An SCT-013-000 non-invasive current sensor, incorporating a current transformer (CT) with an input current rating of 100A, was adopted to measure the input current of the DPB. The sensor comprises a split-core current transformer with an output current of 50mA for the 100A input. The secondary terminal of the transformer is connected to a burden resistance to convert the output current to a voltage signal (Kumar, & Venkatesan, 2020). In addition, a simple voltage divider circuit was used to add a DC voltage level of

1.65V (VCC/2) before entering the input pin of the analog-to-digital conv converter (ADC) of a micro-controller.

Solid-State Relays

A solid-state relay is an electrical switching device that turns on or off when a small external voltage is supplied to its control terminals. Unlike electromechanical relays (EMRs), which function and switch a supply using coils, magnetic fields, springs, and mechanical contacts, the SSR does not incorporate any coils or moving parts. As an EMR, the SSR offers complete electrical isolation between its input and output contacts (Dhaou, etal 2022). Additionally, DC, single-phase, and three-phase AC currents are easily switched using appropriate SSRs. Generally, the SSR employed Triac or switching transistors in addition to a low voltage control circuit. Depending on the mode of operation, there are two common types of SSR: zero-crossing and random turn on SSRs. A zero-crossing detection (ZCD) circuit is predominantly included in the zero-crossing SSR. As a result, the ZCD SSR is activated when the current waveform passes through zero current. On the other hand, the random turn on SSR works at any random point in the current waveform. A zero-crossing SSR is utilized for switching resistive loads, while the random turn on SSR is used in the case of the inductive loads. In this prototype, to enable switching control of the connected loads, SSRs with a rating load current of 40A, voltage rating of 24 to 380VAC, and control signal level ranging from 3 to 32VDC were employed. Table 1 summarized the types and the ratings of sensors and actuators used in the panel implementation.

Table 1 Power component used in the PDB realization

S/N.	COMPONENTS	RATED VALUE (UNIT)
1.	MCB	100A
2.	RCB	30mA
3.	Sub CBS	30A/25A/20A/15A/10A
4.	Raspberry PI Controller	Cortex-A53
5.	Vol6tage Sensor	250V
6.	Current Sensor	160A/50Ma
7.	SSR	24-380VAC/40A/3-32VDC

Power and Energy Measurement

Smart metering aims to provide effective and continuous monitoring of resource usage. This process commonly uses IoT technology to transmit the collected data to local or internet servers. The devices attaining this function are regularly recognized as smart

EDITOR-IN-CHIEF
Prof. Saeid Eslamian [IRAN]

meters. While there are many devices on the market today, integrating them into a functional smart metering solution for a given application is the most challenging task. In addition to ensure two-way communication, with a sample rate of approximately 1s, the IoT-based smart meter should be able to handle all smart metering capabilities in near real-time. Linear and non-linear loads are the two most common forms of electric loads, which are mainly used in home load demand (Dhaou, etal, 2022). The present smart meter design is primarily intended for monitoring household linear loads such as air-conditioners, refrigerators, fans, heaters, and lighting. To realize a smart metering task in the proposed design, we adopted the following basis. In the AC time domain, sinusoidal voltage and current signals are expressed by:

$(t)=(\omega t)$……..(1)
$(t)=(\omega t+\theta)$……(2)

Where vm and ω indicate the voltage amplitude and angular frequency, respectively. Im and θ denote the current amplitude and phase angle between the measured voltage and the current signals. The RMS values of these analog signals are computed after their instantaneous values have been collected, sampled, and digitalized using discretization techniques:

$Vrms= \sqrt{\frac{1}{N}\sum_{n=1}^{n} V_2}$ …….. (3)
$Irms== \sqrt{\frac{1}{N}\sum_{n=1}^{n} I_2}$……..…….. (4)

voltage and the current sample readings, and N is the sample size. Using the corresponding voltage and the current RMS values, the apparent power (S) is evaluated:

S=Vrms Irms ……. (5)

The real power (P) is defined as the average of the multiplied voltage-current discrete values; thus, it is computed by:

$P== \sqrt{\frac{1}{N}\sum_{n=1}^{n} VI}$ …….. (6)

Consequently, the power factor (PF) is obtained by:

$PF=cos(\theta)=PS$…….. (7)

EDITOR-IN-CHIEF
Prof. Saeid Eslamian [IRAN]

The reactive power (Q) is calculated by:

$$Q=S\times(\theta)=\sqrt{S^2-P^2} \ldots\ldots\ldots\ldots\ldots (8)$$

The energy consumption is computed by accumulating the power-time product during a time interval (Δt) using the equation:

$$E=\ =\sum_{n=1}^{n} P\mathrm{i}(\Delta \mathrm{t})\mathrm{i} \ldots \ldots \ldots \ldots \ldots \ldots \ldots \ldots (9)$$

Microcontroller

In this implementation, the sensors collect the required data from the DPB, and then a raspberry microcontroller-based module receives, processes, and transmits that data to the server IoT platform for data storage, remote control, and real-time monitoring through a Wi-Fi network. The esp32 microcontroller was chosen for this application because of its compact size, low cost, high speed, low power consumption, and ease of configuration (Kondoro, etal 2021). These features make it suitable for a variety of industrial IoT applications and prototyping. The ESP-WROOM-32 module, equipped with 802.11 b/g/n WiFi and 4.2 BR/EDR + BLE Bluetooth modules, operates at a voltage range of 2.2V to 3.6V with an average current of 80mA. Therefore, it is simply powered with a 5V USB adaptor, a separate input DC power supply, or a single-cell lithium-polymer (LiPo) battery (Chen, and Zhang 2021).). Additionally, it comprises 18 analog-to-digital converters (ADC), each 12-bit and two (8-bit) digital-to-analog converters (DAC). each 12-bit and two (8-bit) digital-to-analog converters (DAC). In the present work, metering data was temporally stored and preprocessed at the edge before being transmitted to an application operating on a cloud platform.

IoT Platforms and Protocols

Many capabilities for remotely controlling IoT devices are offered on the platforms, including provisioning, secure data storage, over-the-air firmware upgrading, data visualization, and analytics. In this implementation, real-time load monitoring and controlling were performed throughout the Blynk IoT platform. Blynk is a powerful industrial IoT platform that supports over 400 hardware devices including the esp32 modules (Tightiz, and Yang 2020). Regarding its service security, Blynk mostly relies on the industry standards known as transport layer security (TLS) protocol. A Blynk server, by default, uses the latest available protocol TLSv1.3. We used the Blynk mobile application to display the collected data for customer load profiles, energy consumption, and appliance remote controlling using interactive dashboards. The data processed by the

EDITOR-IN-CHIEF
Prof. Saeid Eslamian [IRAN]

esp32 module is represented in 12-bit accuracy, and every 1s a reading is sent to the IoT Blynk server. The Blynk server receives the transmitted data sent by the esp32 including the sensed voltage and current signals in addition to the other edge-computed electric power quantities. A designed dashboard, on the Blynk platform, was allocated to display the DPB collected data of voltage (V), current (A), real power (in kW), apparent power (in kVA), reactive power (in kVAR), power factor, and the consumed energy (in kWh)(Kondoro, etal 2021). Additionally, the user can simply identify the recent status of each connected load of the DPB, and they can remotely control them (on-of switching) by clicking on the dedicated icons on the dashboard. More recently, Thing Speak is frequently used for IoT system prototypes and proof of concept that needs further cloud computing and analytics. This IoT messaging is a machine-to-machine communication protocol that is adequately suitable when the clients' numbers are small with low resources, making it appropriate to be used on microcontrollers. Therefore, to save network traffic, MQTT message headers are minimal. The MQTT protocol is based on a publisher/subscriber configuration. In this protocol, the publisher publishes data to a server (commonly known as a broker), and the subscriber subscribes to the server and gets data (of a certain topic) from the server. The MQTT broker is in-charge of message distribution, and it is found somewhere in the cloud. The publish/subscribe architecture allows the linking of limited bandwidth devices across wireless networks. The publish/subscribe design allows messages to be delivered to client devices without the requirement for the device to query the server regularly. A secure socket layer (SSL) is used to secure the MQTT communications over TCP/IP or Web Sockets. Regarding QoS, the MQTT protocol offers three levels, namely QoS-0, QoS-1, and QoS-2. In first level, only the payload is delivered or received in QoS-0, and neither the receiver nor the sender acknowledges or saves and sends the message. This level is the very bare minimum that provides the best possible delivery effort. In QoS-2, data transmission is guaranteed and delivery will take place on a schedule. When the broker receives a QoS-2 published packet, it processes it and then provides the publishing client with a publish received message, which verifies to the client that the broker has successfully received the message. After that, the client discards the previously-stored published packet and replies to the server with a publish-release packet.

Load Forecasting Model

It is well known that human activities and weather conditions greatly affect energy consumption. Therefore, several historical weather parameters were used as input predictors of the load forecasting model. The timestamp monthly reported data of the energy consumption along with historical weather condition observations such as

EDITOR-IN-CHIEF
Prof. Saeid Eslamian [IRAN]

minimum temperature (Tmin), maximum temperature (Tmax), average temperature (Tav), relative humidity (Hum), and wind speed (Wind) were used as inputs to train several ML models according to the framework displayed in Figure 5. Initially, the datasets were collected and preprocessed to remove any observed outliers (Wen, etal 2020).). To make the computations easier and to prevent the impact of unmatched data scales on model conversion and its training time, the power load data, as well as its corresponding weather condition observed, were normalized using the equation: $X_n = \frac{X - Xmin}{Xmax - Xmin}$ ……..(10)
Where xn denotes the normalized data, x denotes the original data, xmin , and xmax denote the minimum and the maximum values observed in the dataset, respectively. After the model training, the manipulated output data was recovered in its original form using the equation:

x = xn x(max – xmin) + xmin . . . . . (11)

To discover the most essential factors that greatly affect the forecasting model, we employed a correlation matrix (CM) along with a principal component analysis (PCA) in statistical processes known as feature selection. To obtain an accrete ML model suitable for load forecasting, several datasets of electric residential loads were collected over the previous years (Hahn, etal 2020). Then, different supervised ML algorithms were trained and tested for each dataset. These models were linear regression, Gaussian process regression, regression trees, ensembles of regression trees, and SVM models. Several assessment indices are commonly used to evaluate and validate ML models (Sunny, etal 2020). In this study, the predicting performance was evaluated using the following measurements:
(1) Residuals, ri , which represents the model's error for each data point. All regression metrics are a summary of these values which are given by:

$r_i = (y_i - \hat{y}_i)^2$ …… …….. (12)

Where yi refers to the actual, or measured, response values of the model, while $\hat{y}i$ refers to the predicted values;
(2) Root mean square error (RMSE), which is calculated by:

$RMSE = 1\ N\ (y_i - \hat{y}_i)^2\ mi = 1$ ……. (13)

EDITOR-IN-CHIEF
Prof. Saeid Eslamian [IRAN]

(3) In addition, the coefficient of determination, R2, is commonly used to evaluate and compare various regression models, and it is evaluated by:

$$R2=1-\Sigma Ni=1(yi-\hat{y}i)2\ \Sigma Ni=1(yi-\underline{yi}) \quad \ldots\ldots\ldots\ldots\ldots (14)$$

Where $\underline{yi}$ refers to the mean of the predicted values. After selecting the best-fit regression model, its hyperparameters were tuned using extra optimization choices. Therefore, the objective function, recognized here as the loss function, is minimized for optimally tuned model hyper parameters. This function returns the mean squared error (MSE) values for each training iteration. The MSE is calculated as follows:

$$MSE=1N\Sigma i=1(yi-\hat{y}i)^2 \quad \ldots\ldots\ldots\ldots\ldots\ldots (15)$$

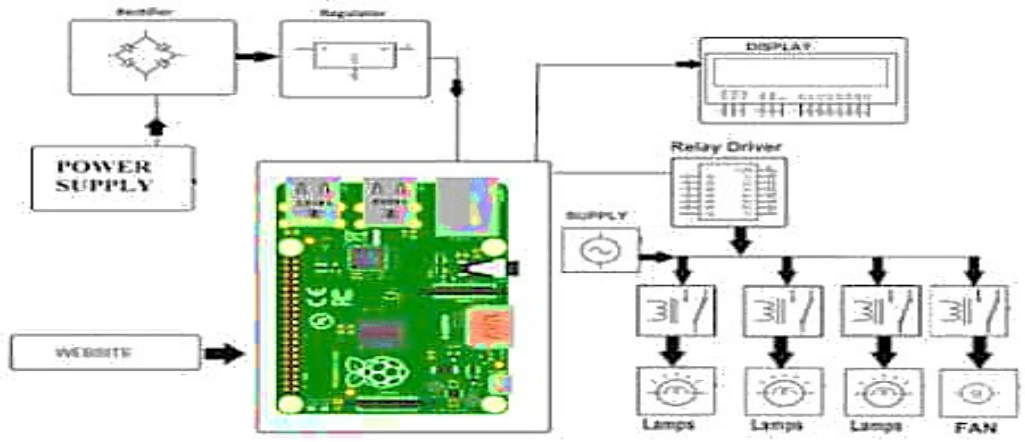

Figure 4: Circuit Diagrams of Design of a 100A Smart Distribution Box

After optimizing the model, it is deployed into the cloud and linked to the data collected from the DPB. The model is updated with future values of predictors to predict and to visualize the future load demand.

Review of Related Works

Development of automation systems have evolved from cabled remote extenders to infrared and ultrasonic radio controllers and now to microcontrollers the following researchers worked on automation system to create easy access and control of appliances: The paper presented a technique of using android based app to interface via Bluetooth, a microcontroller to control the entire home such as garage gate, water pumps, lighting etc. Looking at these limitations and techniques used for these

innovations reviewed, the intended Electrical power distribution board development focuses on the employment of cheap, locally sourced, readily available electronic components such as embedded system components to build a smart Power Distribution Board automation system prototype that could be controlled on an Android phone based App to set power sections such as Lighting, socket outlet, cooker control units, water pump ON and OFF.

Research Gap

The traditional distribution boards which does not have built in wireless communication capabilities and lack intelligent features, which makes them less efficient, less adaptable to modern energy demands and less safe. As the world shifts towards smart grid technology, there is a growing need for advanced electrical power distribution. This work aims to address these issues by designing and constructing a 100A smart distribution board. This smart distribution board will incorporate intelligent features such as real time monitoring, load balancing algorithms and remote-control capabilities.

Component Selection:

The selection of components is key toward achieving design and implementation of this 100A smart distribution board with Components Rated for 100A:

Circuit Breakers: These protect circuits from overcurrent situations. Look for circuit breakers rated specifically at 100A.

Fuses: Fuses rated for 100A can also be used as additional protection devices in the circuit.

Relays: If you need to control high-power devices remotely, relays rated at 100A can be employed.

Switches: Switches rated at 100A can be used for manual control of circuits.

Current Sensors: These sensors can monitor the current flowing through a circuit. Look for current sensors rated at 100A.

Voltage Sensors: To measure voltage levels in the circuits. Voltage sensors compatible with your voltage specifications are necessary.

Temperature Sensors: If your distribution box operates in varying temperature conditions, sensors rated for the relevant temperature range would be needed.

Microcontrollers and Communication Modules: Microcontroller: Microcontrollers like Arduino or Raspberry Pi can be programmed to control and monitor various components in your distribution box. Make sure the input/output pins and processing power meet your requirements.

EDITOR-IN-CHIEF
Prof. Saeid Eslamian [IRAN]

Research and Literature Review

Conduct a comprehensive review of existing literature, research papers, and patents related to smart distribution boards, electrical distribution systems, automation technologies, and safety standards. This establishes a solid foundation by understanding the current state of the field and identifying best practices and innovative approaches.

Requirement Analysis

Identify specific requirements for the smart distribution board based on the project objectives and potential user needs. This includes determining load capacity, voltage ratings, communication protocols, safety features, and any additional desired functionalities.

System Design

Develop a detailed design of the 100A smart distribution board. This phase involves creating schematic diagrams, layout plans, and specifying components. Key considerations include integrating smart sensors, communication modules, microcontrollers, and other essential hardware.

Prototype Development

Construct a functional prototype based on the system design. Conduct rigorous testing and validation to ensure the prototype meets the specified requirements and performs as intended. Iterative testing and refinement are undertaken to optimize performance.

Real-time Monitoring and Control

Implement a real-time monitoring system to track electrical parameters such as current, voltage, power consumption, and temperature. Incorporate an intelligent control mechanism enabling remote access and automated management to enhance distribution efficiency.

Safety Features

Integrate essential safety mechanisms including overload protection, short-circuit protection, and surge protection. These features ensure the smart distribution board operates securely under various operational conditions and potential hazards.

Load Calculation

Once you have the power ratings for all appliances and devices, you need to consider the diversity factor. The diversity factor is a factor used to consider the likelihood that not all

EDITOR-IN-CHIEF
Prof. Saeid Eslamian [IRAN]

devices/appliances will be operating at full power simultaneously. For a residential setting, the diversity factor is typically between 0.5 and 0.7, indicating that not all devices will be operating at their maximum power rating at the same time. To calculate the total power demand considering the diversity factor, follow these steps:
List of Appliances and Devices:

1. Air Conditioner: 9000W
2. Refrigerator: 5000W
3. Washing Machine: 2400W
4. Oven: 4000W
5. Lights: 6000W
6. Computer: 300W
7. Television: 600W

Calculate Total Power Demand:

Total Power Demand = (9000W + 5000W + 2400W + 4000W + 6000W + 300W + 600W) = 27300W = 27.30 kW

Apply Diversity Factor:
Total Power Demand with Diversity Factor = 27.30 kw
kW × Diversity Factor (let's assume 0.6 for this example)} = 16.4 Kw

Convert Power to Amperes:
Current (in Amperes) = Total Power Demand with
Diversity Factor (kW) / {Voltage (typically 230V for residential areas)
Current (in Amperes) Voltage (typically 230V for residential areas)
Total Power Demand with Diversity Factor (in kW)
Current = {16.4 kW}/ {230V} = 71.30A

Therefore, the 100A smart distribution box would be suitable for this scenario as the calculated current demand (71.30A) is less than the box's capacity (100A), providing a safety margin for future addition or temporary power spikes.

Adhere to local and international electrical codes and regulations to ensure the system is safe for operation, Safety First should be the top priority. Proper Sizing: Ensure that the components, especially circuit breakers and wiring, are properly sized to handle the maximum current load without overheating or tripping. Smart Features Integration:

EDITOR-IN-CHIEF
Prof. Saeid Eslamian [IRAN]

Smart features, including remote monitoring and control, can enhance efficiency and convenience, but they must be implemented securely to prevent unauthorized access. Quality Components: Use high-quality components from reputable manufacturers to ensure reliability and longevity of the distribution box. Professional Installation: Installation should be carried out by qualified electricians who understand the intricacies of smart systems and can guarantee a safe and functional setup. Regular Maintenance: Implement a regular maintenance schedule to check for wear, tear, or any signs of malfunction. Smart components may require firmware updates for optimal performance. Clear Documentation: Properly document the design, including circuit diagrams, component specifications, and user manuals. This documentation is crucial for future maintenance and troubleshooting. The 100A smart distribution board system utilizing advanced load monitoring, efficient load management, and automation capabilities for optimized electrical distribution in residential, commercial settings and can be designed for industrial use which is design with real-time monitoring capabilities, enabling users to track electrical consumption and system performance remotely and to develop an intelligent load management system that optimizes power distribution, minimizes overload risks, and enhances energy efficiency. Also identify the limitations and challenges of conventional distribution boards, including issues with load balancing, monitoring and manual control. Additionally, it integrates automation features into the distribution board, allowing for remote control and smart scheduling of connected electrical appliances and to implement safety mechanisms within the smart distribution board to protect against electrical faults, short circuits, and voltage fluctuations. Furthermore, conduct rigorous testing and validation of the smart distribution board prototype to ensure its reliability, accuracy, and compliance with electrical safety standards and to assess the cost-effectiveness and economic benefits of deploying the 100A smart distribution board compared to traditional distribution solutions.

CONCLUSION

This study successfully demonstrated the design and development of a 100A smart distribution board aimed at improving the efficiency, safety, and reliability of modern electrical power systems. By integrating advanced protection mechanisms, real-time fault detection, and Internet of Things (IoT) connectivity, the system enables both local and remote monitoring and control of electrical distribution. These features reduce downtime, enhance operational safety, and provide a more user-friendly interface for end users. The use of modern components and intelligent control technologies ensures optimal performance under varying load conditions. Overall, the proposed smart

EDITOR-IN-CHIEF
Prof. Saeid Eslamian [IRAN]

distribution board represents a significant advancement in modernizing power distribution infrastructure, supporting the evolution of smart grid networks, and laying the foundation for future intelligent energy management systems.

RECOMMENDATIONS

It is recommended that consultation should be carried out with an experienced electrical engineers or contractors during the design phase. Their expertise can prevent common pitfalls and ensure the system is well-designed. Component Selection: Chose components rated not just for current requirements but also for expansion if needed. Smart systems should be scalable. Overload Protection: Implement overload protection mechanisms, such as circuit breakers, to prevent overheating and electrical fires in case of excessive current flow. Grounding and Earthling: Ensure proper grounding and earthing to prevent electrical shocks and to safeguard sensitive electronic components in the smart system. User Education: If applicable, educate end-users about the smart features, especially if there's a user interface involved. Clear instructions can prevent misuse and enhance user experience. Regular Training: If the system is for commercial or industrial use, provide training to personnel who will be interacting with the distribution box. They should understand basic troubleshooting and emergency protocols. Compliance: Regularly check for updates in electrical codes and regulations to ensure ongoing compliance. Non-compliance could result in fines or, more importantly, compromised safety. Remember, electrical work, especially when it involves smart systems, is intricate and potentially dangerous. Always involve professionals and ensure that every step is taken to guarantee the safety and functionality of the distribution box.

REFERENCES

Al Mamun, A., Sohel, M., Mohammad, N., Sunny, M. S. H., Roy Dipta, D., & Hossain, E. (2020). A comprehensive review of the load forecasting techniques using single and hybrid predictive models. *IEEE Access, 8*, 134911–134939.

Almas'ud, T. L., K Pramudito, D., & Badruzzaman, A. (2025). *IoT-Enabled Smart Home Energy Monitoring System Using Web Server-Based Control Logic*. Jurnal Informasi dan Teknologi, 7(1), 27-34.

Babiuch, M., & Postulka, O. (2020). Implementation of modern communication technologies for smart home systems. *IFAC-PapersOnLine, 53*(2), 12244–12249.

Chen, H., & Zhang, J. (2021). IoT-based power monitoring system for residential and commercial energy management. *Energy Reports, 7*, 2632–2640.

Dhaou, I. B., Maouhoub, I., & Chraygane, M. (2022). A review of smart grid communication technologies and architectures. *Sustainability, 14*(3), 1348.

Dileep, G. (2020). A survey on smart grid technologies and applications. *Renewable Energy, 146*, 2589–2625.

EDITOR-IN-CHIEF
Prof. Saeid Eslamian [IRAN]

Fujimoto, Y., Ishii, H., & Hayashi, Y. (2020). Designing sustainable smart cities: Cooperative energy management systems and applications. *IEEJ Transactions on Electrical and Electronic Engineering, 15*(9), 1256–1270.

Hahn, A., Govindarasu, M., & Fitzpatrick, S. (2020). Cyber-physical security testbeds: Architecture, application, and evaluation for smart grid. *IEEE Transactions on Smart Grid, 11*(2), 1331–1341.

Kondoro, A. W., Youssef, T., & Khatoun, R. (2021). Analysis of secure IoT protocols for microgrid communication. *Future Generation Computer Systems, 116*, 1–12.

Kumar, P. S., & Venkatesan, M. (2020). Design and implementation of IoT-based smart energy management system. *Materials Today: Proceedings, 33*, 4179–4183. https://doi.org/10.1016/j.matpr.2020.05.463

Omokere, O. K., Olubiwe, M., Olatomiwa, L. J., & Jack, K. E. (2023). *Implementation of smart distribution board for domestic energy management and regulatory system*. Electrica, 23(3), 673-680.

Rodrigues, E. M. G., Godina, R., Shafie-Khah, M., & Catalão, J. P. S. (2020). Energy storage systems supporting increased penetration of renewables in electrical grids. *Energy Reports, 6*, 385–392.

Shaikh, A. I., & Dhanure, S. P. (2017). Smart energy management using Internet of Things platform. *International Journal of Innovative Research in Science, Engineering and Technology, 6*(7), 13726–13732. Retrieved from http://www.ijirset.com

Tightiz, L., & Yang, H. (2020). A comprehensive review on Internet of Things (IoT) and artificial intelligence (AI) for smart homes. *Applied Sciences, 10*(16), 5538.

Wen, L., Zhou, K., Yang, S., & Lu, X. (2020). Optimal load control and energy management for smart grids with renewable integration. *Applied Energy, 275*, 115338.

Yang, Q., & Wang, H. (2021). Privacy-preserving transactive energy management for IoT-aided smart homes via blockchain. *arXiv preprint*. https://arxiv.org/abs/2101.03840

EDITOR-IN-CHIEF
Prof. Saeid Eslamian [IRAN]